Better Homes and Gardens®

WOOD®

THE WORLD'S LEADING WOODWORKING MAGAZINE

FEBRUARY 1993 • ISSUE NO. 59
Please display until February 9

Build our HEIRLOOM CRIB
Page 34

RANDOM-ORBIT SANDERS
Why they're HOT!

TABLESAW SAFETY GUIDE

HOW TO DRY YOUR WOOD

TURNING TOOLS
Tips on buying a basic set

IRRESISTIBLE
Pendulum clock
Ash baby crib
Photo frame
Tree birdhouse
Bread box

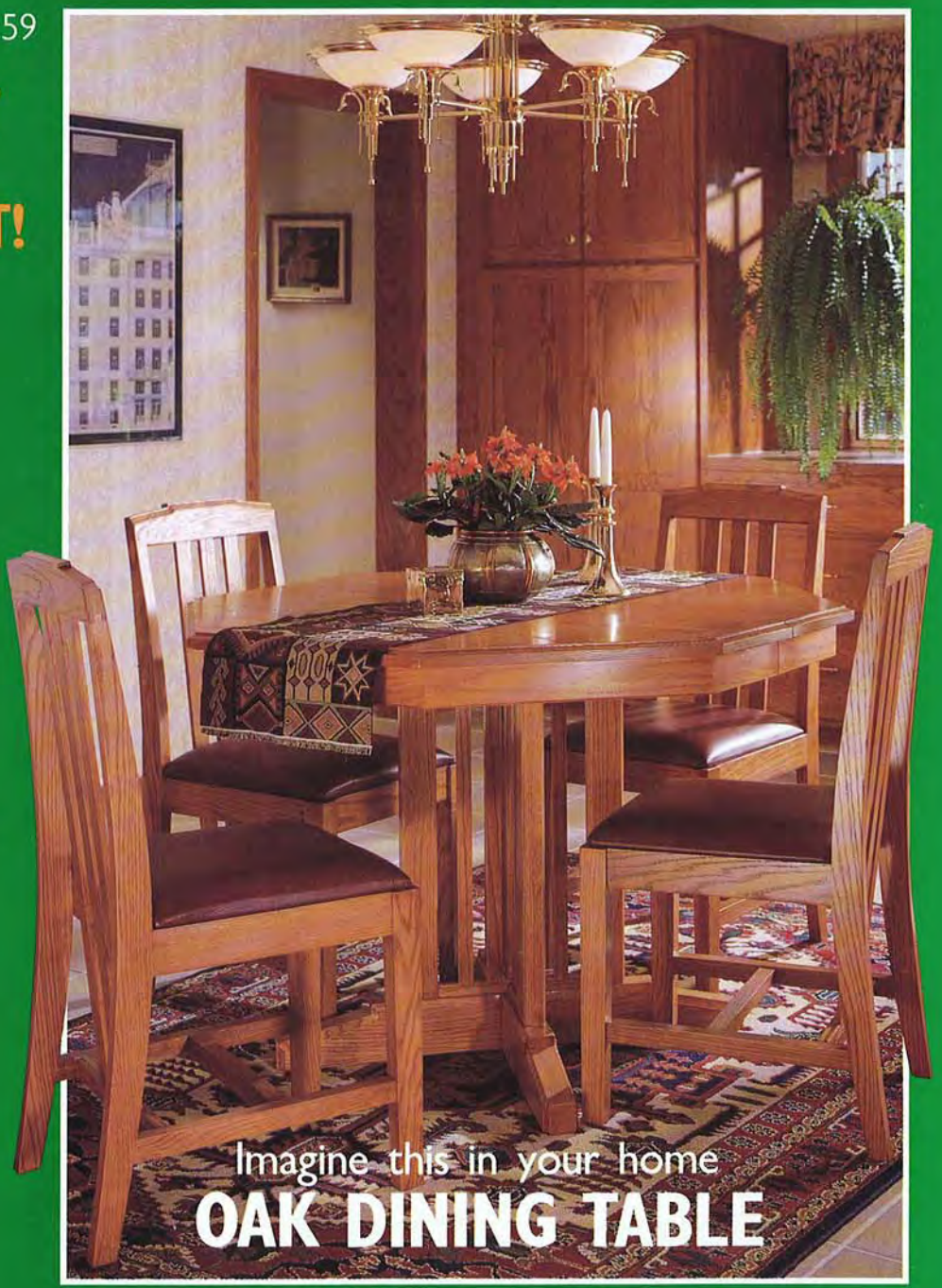

0 71486 14072 6 02 $4.95

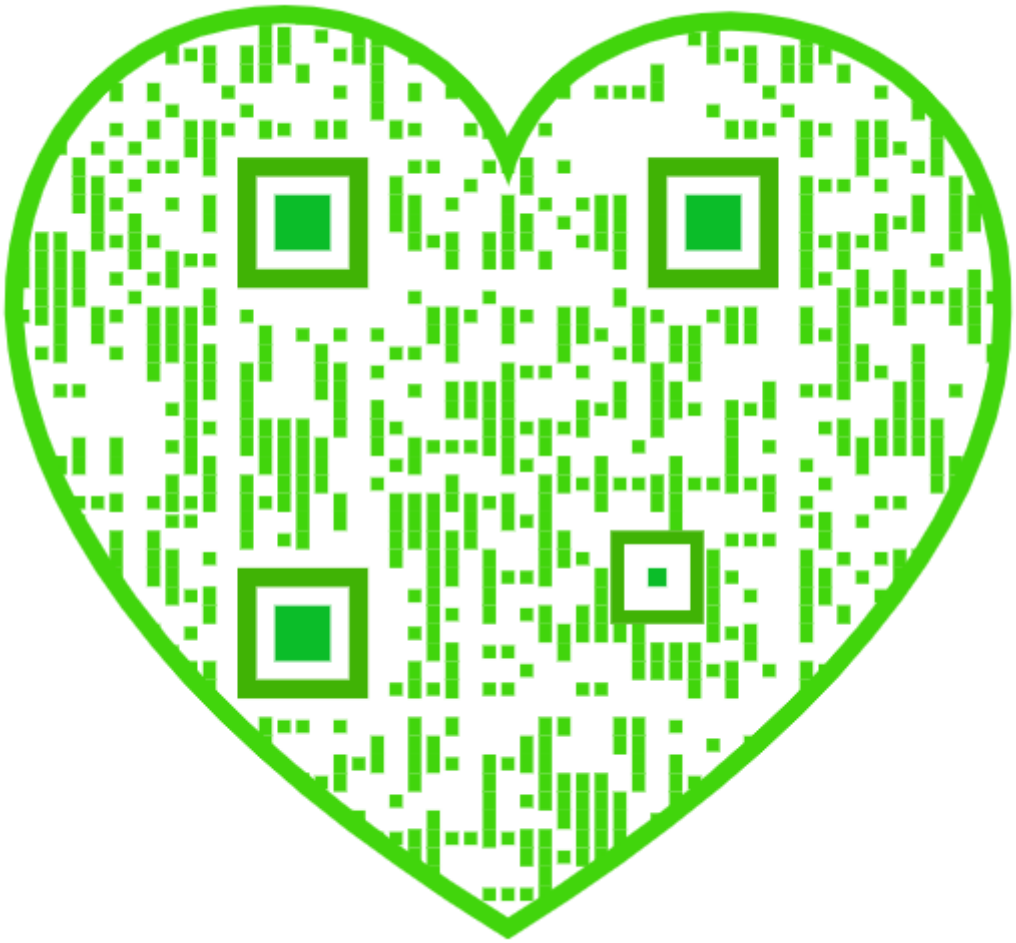

10th ANNIVERSARY

Grizzly IMPORTERS, INC.

"IMPORTERS OF FINE MACHINERY"

SHARPSHOOTERS

FREE BOX OF NAILS WITH ANY NAILGUN PURCHASE!

STAPLER (WITH SAFETY)

An excellent lightweight unit that is very well balanced. Measures 2" wide by 7" tall and 9½" long. Weighs only 2½ lbs! Capacity is from ½" to ⅞" and takes 100 18-gauge staples.

MODEL G1847 ONLY $89.95

EXTRA STAPLES (18-GAUGE) BOX OF 5000							
MODEL		SIZE	PRICE	MODEL		SIZE	PRICE
G1848	413K	½"	$ 8.95	G1850	419K	¾"	$11.95
G1849	416K	⅝"	$ 9.95	G1851	422K	⅞"	$12.95

BRAD-NAILER (WITH SAFETY)

A favorite for casing and finish carpentry work, this gun has a capacity from ⅜" to 1 3/16" brad-nails. Lightweight and nicely balanced, it measures 2" wide, 7⅛" high by 9½" long and weighs only 2.62 lbs. Takes 100 18-gauge nails.

MODEL G1852 ONLY $99.95

SUPER BRAD-NAILER (WITH SAFETY)

The best all-around finishing gun is this super-nailer that shoots brad-nails from ⅝" up to 1 9/16" long. Also very well balanced and lightweight, it measures 2⅜" wide, 8⅞" high by 12 3/16" long and weighs only 3.3 lbs! Takes 150 18-gauge nails.

MODEL G1861 ONLY $129.95

FOR BRAD NAILERS (18-GAUGE)							
MODEL	SIZE	PRICE		MODEL	SIZE	PRICE	
G1857	F10 ⅜"	$ 7.95	BOX OF 5000	G1856	F30 1 3/16"	$12.95	BOX OF 5000
G1853	F15 ⅝"	$ 7.95	BOX OF 5000	G1858	F35 1⅜"	$13.95	BOX OF 5000
G1854	F20 ¾"	$ 9.95	BOX OF 5000	G1859	F38 1½"	$13.95	BOX OF 5000
G1855	F25 1"	$11.95	BOX OF 5000	G1860	F40 1 9/16"	$14.95	BOX OF 5000

MAGNUM BRAD-NAILER

This "Magnum" nailer will shoot 16-gauge nails up to 2½" long! We shot several boxes of the longest nails in soft and hard woods without jamming the gun. Operates on 75-120 P.S.I. pressure and weighs 5.90 lbs.

GREAT FOR CABINET MAKING AND OTHER APPLICATIONS THAT REQUIRE LONGER BRADS.

MODEL G2413 ONLY $225.00

FOR MAGNUM BRAD NAILER (16-GAUGE) BOX OF 2500					
MODEL	SIZE	PRICE	MODEL	SIZE	PRICE
G2414	1¼"	$ 7.95	G2417	2"	$11.95
G2415	1½"	$ 8.95	G2418	2¼"	$12.95
G2416	1¾"	$ 9.95	G2419	2½"	$13.95

FRAMING NAILER

This is a dependable, heavy duty unit that is designed for optimum performance with minimum maintenance. For a framing nailer, it is very lightweight — only 8.3 lbs.

Drives 2" to 3½" clipped-head nails that are available below, as well as across the nation. Fast-loading of up to three sticks of nails, 75 or 105 nails, depending on size. Excellent for framing, truss-building, roofing, and building crates and pallets.

MODEL G2420 ONLY $355.00

BRIGHT NAILS FOR FRAMING NAILER				GALVANIZED NAILS FOR FRAMING NAILER			
MODEL	SIZE	PRICE		MODEL	SIZE	PRICE	
G2421	2" x .113"	$39.95	BOX OF 4000	G2426	2"x.113"	$49.95	BOX OF 4000
G2422	2½ " x .113"	$23.50	BOX OF 2000	G2427	2½ "x.113"	$33.50	BOX OF 2000
G2423	3" x .120"	$29.95	BOX OF 2000	G2428	3"x.120"	$39.95	BOX OF 2000
G2424	3¼" x .131"	$31.50	BOX OF 2000	G2429	3¼"x.131"	$41.50	BOX OF 2000
G2425	3½" x .131"	$39.95	BOX OF 2000	G2430	3½"x.131"	$49.95	BOX OF 2000

93-100

P.O. BOX 2069
BELLINGHAM, WA 98227
Customer Service: (206) 647-0801

ORDERS: 1-800-541-5537

IF YOU LIVE WEST OF THE MISSISSIPPI

MasterCard VISA DISCOVER

IF YOU LIVE EAST OF THE MISSISSIPPI

2406 REACH ROAD
WILLIAMSPORT, PA 17701
Customer Service: (717) 326-3806

ORDERS: 1-800-523-4777

THE EDITOR'S ANGLE

THE BETTER-LATE-THAN-NEVER HOUSEWARMING GIFT

For some reason, the members in my family think that arriving someplace on time isn't important to me. When planning an evening out, my wife wants me home, dressed, and ready to go at least a half hour before we really need to leave. And when I tell the kids I'll pick them up at a designated location at a certain time, they get nervous over the prospect that I'll show up late. Why, my loving family even accused me of being "the excuse" for not getting them to church on time.

That's why, when I found out that my mom planned to move into a condominium this past June, I decided to make her a housewarming gift. And, by golly, I determined to get it done ahead of time and show the family.

I chose a clock plan from our sister publication *Weekend Woodworking Projects*, bought wood materials, and ordered the clock hardware. Through March and early May, everything went smoothly—I had the clock 95% done. But when the time came to put the finish on, I decided it really should match Mom's other new furniture, which I needed to see.

Photograph: John Hetherington

Then came mushroom hunting, tennis season, vacation in June, and (oh no!) Mom's moving day. Since the clock was unfinished, I decided to give her a while to settle in and get comfortable.

As it turns out, four months later (and late), I finally delivered the project. But I'm happy to report that she's delighted with the clock and that we found a great spot for it in her new home.

Thanks for everything, Mom, especially the advice on always seeing a project through to the end. And thanks for not giving me a bad time about being late. I'll do better from now on—I promise.

Larry Clayton

SUBSCRIPTION SERVICE: For a change of address it is best for you to directly contact your local Postmaster who then will notify us. For any other service on your subscription, please write *WOOD* Customer Service, P.O. Box 55050, Boulder, CO 80322-5050 (enclose a recent label from your magazine for better service). Or you may phone toll-free 800-374-9663.
EDITORIAL MAILING ADDRESS: *WOOD* magazine, 1912 Grand Ave., Des Moines, IA 50309-3379. WE CARE!

Incredible New Power Tool Eliminates Hand Sanding

With the NEW Fein "Triangle" Sander, time consuming, sore finger, bloody knuckle sanding is a thing of the past.

Imagine using a power tool to sand all those areas where before, you had to fold up a piece of paper and "finger sand."

You know all those difficult to sand areas; inside & outside edges, closed corners, coves, spots, glue marks, seams, moldings, intricate profiles and so on. **With the Fein "Triangle" Sander you can sand right up to, into, and along edges & corners without dulling the edge or altering the profile.**

Unlike ordinary sanders, the FEIN "Triangle" Sander doesn't rotate, rather it "oscillates" (a side to side movement) at a blurring 20,000 times a minute. This unique action combined with the distinct triangular sanding pad, keeps the sander from running away from, or bouncing off of the edge line.

The sanding pad can be rotated, bent, formed, or cut down to any size you want for sanding moldings and channels.

It's easy to get more information on our complete line of high performance sanders, simply call:

1-800-441-9878

Fein Power Tools Inc.
Pittsburgh, PA
(412)331-2325
Fax (412)331-3599

WOOD PEN KITS

MAKE YOUR OWN PENS, PENCILS AND MORE!

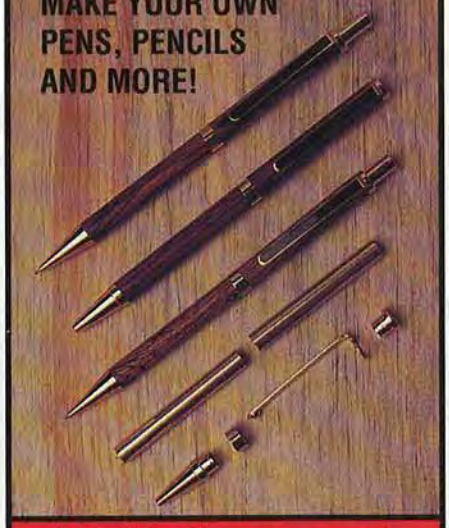

Get started making your own pens!
STARTER PEN KIT $29.95 PPD.
Includes: Turning Jig for your lathe (requires drill chuck for mounting), 5 Pen Kits, 5 Exotic Wood Blanks.
Send $2.00 for our 56 page color catalog of woodturning supplies and accessories. Refunded with order.
Craft Supplies USA
1287 E. 1120 S. Provo, UT 84606
Phone 801 373-0917

STAINED GLASS VIDEO & CATALOG

Improve the Looks and value of your home with:

- Entry doors & sidelights
- Kitchen cabinet inserts
- Tiffany lampshades

Save money and make it yourself - Delphi shows you how!

Make Your Own Custom Stained Glass...
The perfect way to get started in stained glass. Our 25-minute video covers all the basics: Scoring, breaking, foiling, and soldering. Filled with clear and simple instructions, hints, close-ups, and examples to help you craft your own stained glass windows, lamps, and more. VHS only.
#6149VW...$10.95 + $3.00 shipping/hand.

A $10.95 rebate is applied to your next order. If you don't wish to purchase, just return the video for a prompt refund, but keep the 80-page color catalog.

To Order - Call Toll Free: 1-800-248-2048

DELPHI STAINED GLASS
2116 E. Michigan Ave. Lansing, MI 48912

Better Homes and Gardens.

WOOD®

THE WORLD'S LEADING WOODWORKING MAGAZINE

This issue's cover wood grain: locust *Cover photograph: Wm. Hopkins*

FEBRUARY 1993 ISSUE NO. 59

CRAFTSMAN CLOSE-UP
Da' scrollers 25
South-side Chicagoans Roy King and Scott Kochendorfer prove there's still plenty to learn about scrollsawing with their novel three-dimensional wall plaques.

Echoes of antiquity 30
Capture the beauty of the ages with this classic clock design. Tapered columns separating a molded top and base make room for the swinging pendulum.

Baby's first bed 34
Sweet dreams await the lucky recipient of this sturdy, stylish crib. Mail-order hardware lets you easily raise and lower the sides as needed.

How to succeed at air-drying lumber 40
Don't even think about seasoning your own stock until you read this. Use the accompanying illustration to help you build your stack.

TOOL BUYMANSHIP
Random-orbit sanders 42
Discover why one of these versatile tools deserves a place in your workshop, and which sanders perform best in our side-by-side comparison of 13 models.

CARVING
Painting without the pain 48
Discover the joy of using water-soluble acrylic paints. We'll help you pick colors and brushes, and tell how to apply this easy finish.

Elegant oak dining table 50
Build this mission-styled project, and watch it become the center of attention among your dinner guests. Added leaves let you comfortably seat up to eight.

DEVELOP YOUR SHOP SKILLS
How to level glued-up stock 57
Flatten the surfaces on all of your edge-joined boards using a belt sander and the four-step process described inside.

IN SEARCH OF THE PERFECT FINISH
Sal Marino's friction-film finish for turned objects 58
Achieve the rich luster of old-world finishes on your turnings with the time-saving process from this Brooklyn, New York, woodworker.

Spotlight on tablesaw safety 60
Follow the precautions listed here and avoid close encounters of the worst kind with the most used and abused power tool in your shop.

TURNING
A beginner's guide to turning tools 62
Lathe owners, let this back-to-basics illustrated reference help you assemble the kind of tool kit that best suits your turning interests.

THE CRAFT SHOP
A picture-book project 66
Display a pair of your favorite 5×7" photos in our stand-alone book-like frame. A handsome leather cover binds the book halves together.

Leafy lodging 68
Birds will flock to this tree-shaped shelter.

Wheat-motif bread box 70
Make a showy keeper for baked goods.

Skil's benchtop line 72
Cramped for space? Looking for a tablesaw, drill press, or other benchtop power tool that has an attractive price tag? Check out these models.

SHORT-SUBJECT FEATURES

Editor's Angle	1	Yesterday's Tools	20
Talking Back	6	Great Ideas For Your Shop	22
Tips From Your Shop	10	Ask *WOOD*	74
Products That Perform	16	Finishing Touches	88

Put Your Entire Shop On Wheels
MOBILE MACHINE BASES

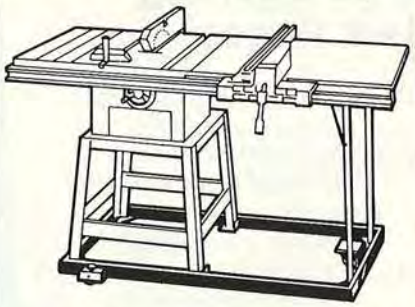

- Increase your working area
- Store machines when not in use
- Hundreds of models available
- Precision welded steel construction
- Three 2-1/2" wheels for stability
- Dual wheel locks provide positive positioning
- Lifetime warranty

Call for a free catalog

MADE IN USA

HTC Products, Inc.
120 E. Hudson • P.O.Box 839
Royal Oak, Michigan 48068-0839
(800) 624-2027

HARDWOODS
EXOTIC & DOMESTIC
OVER 75 SPECIES
LUMBER • PLYWOOD • VENEERS
TURNING SQUARES & BLANKS

BOOK OF FINE HARDWOODS
$16.00 ppd in Cont US
Provides geographic source, description, uses and availability for over 200 woods. Over 70 woods shown in full color. Charts compare physical properties. 60pgs.

COLLECTORS SAMPLE KIT
30 GORGEOUS WOODS
With BOOK OF FINE HARDWOODS, $51.00*
Exotic & Domestic from Around the World
1/2" X 3" X 6" Sanded Finish
$39.00
*ppd in Cont US
Ideal for Collectors • Schools • Craftsmen • Cabinet & Furniture Makers • Architects • Designers

PURPLE HEART
Deep true purple
IVORYWOOD
White to pale yellow
BRAZILIAN CHERRY
Salmon red to orange brown
Your Choice, ONLY $3.99/bd ft
20 BD FT MINIMUM, MIX OR MATCH, 3"–10" WIDE, 3'–7' LONG 4/4 ROUGH THICKNESS, SURFACED 2 SIDES
FOB PHOENIX

WE SHIP WORLDWIDE
1-800-423-2450
T.M. WOODWORKERS Source
5402 S. 40th Street • Phoenix, AZ 85040
602-437-4415

Clockmaking and Wood Projects in 68 Exciting New Pages!

FREE
Clockmaking Catalog

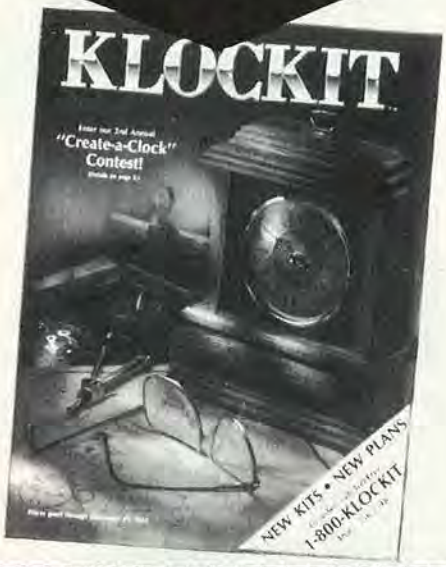

Clock Kits & Plans • Watches
American-made
Quartz Clock Movements
• Mechanical Movements •
Dials, Hands & Numerals
• Weather Instruments •
Music Box Kits & Movements
• Foil Prints •
Woodworking Tools & Plans

You'll find these items and many more in our new Spring catalog. All at great low prices.

And every item is guaranteed: your total satisfaction or money back. So send today for your new Klockit catalog. It's FREE!

Name _____

Address _____

City, State, Zip _____

Or call **Toll-Free 1-800-556-2548** and mention Dept. WD23.

KLOCKIT®
P.O. Box 542, Dept. WD23
Lake Geneva, WI 53147-9961

Buy DIRECT from the Manufacturer and... SAVE!

NEW!

White Non-Loading SANDING BELTS

The Ultimate Woodworking BELT.

Buy 1-Doz. BELTS...Get 12 FREE!

1"x 30" (12 + 12 Free)	**$21.50**	4"x 21" (12 + 12 Free)	**$28.95**
1"x 42" (12 + 12 Free)	**21.95**	4"x 24" (12 + 12 Free)	**29.95**
3"x 21" (12 + 12 Free)	**24.95**	4"x 36" (12 + 12 Free)	**37.95**
3"x 24" (12 + 12 Free)	**25.95**	6"x 48" (6 + 6 Free)	**46.95**

(Available 60x, 80x, 100x, 120x, 150x, 180x). Try our NEW White Non-Loading Cloth in Discs, Wide Belts, Edge & Stroke Belts!

NEW! **Hook & Loop SANDING DISCS**

Buy any 3 (50 pks)...Get 4th pack FREE.

	80 GRIT	100 To 400 GRIT
4½" (8 hole)	**$13.95**	**$12.95**
5" (5 hole)	**13.95**	**12.95**
5" (8 hole)	**13.95**	**12.95**
6" (6 hole)	**16.95**	**15.95**
6" (8 hole)	**16.95**	**15.95**

• All grits in solid packs of 50.
• Coarse grit sizes are available.

TOLL FREE **1·800·428·2222**

• S.&H. – $4.75
• PA residents add 6% sales tax.

INDUSTRIAL ABRASIVES CO.
643 N. 8th ST. • P.O. BOX 14955
READING, PA 19612

Sheep Planter Plan

This sheep grazes wherever you need a colorful accent! Pattern is drawn **FULL SIZE**. Hardware parts available below.

#W885 Sheep Planter Plan.....$6.99/EA

Sheep Planter Hardware Parts

Includes planter box liner, eyes, sheep's wool, and bell. **Not Included:** plan, screws, wood, flowers or paint.

#3350 Sheep Planter Hdw. Parts .$12.99/PKG

HOW TO ORDER: List quantity, part number, item, price & total of order. Include $4.95 shipping & handling per order. MN residents add 6.5% sales tax. Mail check or money order. **Credit card customers call TOLL FREE 1-800-441-9870.**

MEISEL HARDWARE SPECIALTIES
P.O. BOX 70W2 MOUNDS, MN 55364

Better Homes and Gardens® WOOD®

THE WORLD'S LEADING WOODWORKING MAGAZINE

February 1993 • Vol. 10, No. 2 • Issue No. 59

Editorial/Art Staff

Editor **LARRY CLAYTON**
Managing Editor **JIM HARROLD**
Art Director **C. L. GATZKE**
Design Editor **JAMES R. DOWNING**
Senior Editor **PETER J. STEPHANO**
How-To Editor **MARLEN KEMMET**
Products/Techniques Editor **BILL KRIER**
Special-Interest Editor **LARRY JOHNSTON**
Associate Art Director **PERRY A. McFARLIN**
Graphic Designer **CHERYL A. CIBULA**
Project Builder **JAMES E. BOELLING**
Production/Office Manager **DARLENE REYNOLDS**
Administrative Assistant **MARGARET CLOSNER**
Secretary **ROSEMARIE BURCH**

Technical Illustrator **KIM DOWNING**
Technical Consultants: Product Testing **GEORGE GRANSETH, BOB McFARLIN;** Products That Perform **STEVE OSWALT;** Carving **HARLEY REFSAL;** Projects **CHUCK HEDLUND;** Collectible Tools **PHILIP WHITBY**

Publisher **WILLIAM R. REED**
Advertising Director **CHRIS W. SCHRAFT**
Advertising Representatives **CRAIG KAPLAN, BRENDEN DELANEY, VICTORIA PELCYGER**
Promotion/Research Director **EILEEN SULLIVAN**
Advertising Assistant **TARA COLES**
Advertising/Marketing Services Manager **SIGRID FOLKERS**
Publishing Assistant **JACKIE MASON**
ADVERTISING OFFICES: 750 Third Avenue, New York, NY 10017. Phone 212/551-6903.

Circulation Manager **ALAN BRUSH**
Newsstand Circulation Director **MICHAEL SENIOR**
Business Manager **TERRY UNSWORTH**
Production and Technology Director **ROBERT C. FURSTENAU**

Magazine Group Officers

President: **WILLIAM T. KERR.** Vice Presidents/Publishing Directors: **MYRNA BLYTH, CHRISTOPHER LEHMAN, CHRISTOPHER LITTLE, ROBERT MATE, JERRY WARD.** Vice Presidents, Better Homes and Gardens: **DAVID JORDAN, JERRY KAPLAN.** Vice President, Operations: **DEAN PIETERS.** Vice President, Finance: **MAX RUNCIMAN.** Vice Presidents, Marketing: **WILLIAM MURPHY, CLEM SEVDE.**

Corporate Officers

Chairman of Executive Committee **E.T. MEREDITH III**
Chairman of the Board, President, Chief Executive Officer **JACK D. REHM**
Group Presidents: Books **JOSEPH J. WARD;** Broadcasting **PHILIP A. JONES;** Magazines **WILLIAM T. KERR;** Real Estate **ALLEN SABBAG**

Better Homes and Gardens® *WOOD®* (ISSN-0743-894X) is published nine times a year in January, February, April, June, August, September, October, November, and December by Meredith Corporation, 1716 Locust St., Des Moines, IA 50309-3023. Second-class postage paid at Des Moines, Iowa, and at additional mailing offices. Better Homes and Gardens trademark registered in Canada and Australia. Marca Registrada en México. **ONE-YEAR SUBSCRIPTION PRICES:** U.S. and its possessions, $24.97; Canada, $34; other countries, $38. **POSTMASTER:** Send address changes to *WOOD*, P.O. Box 55050, Boulder CO 80322-5050.

©COPYRIGHT MEREDITH CORPORATION 1993. ALL RIGHTS RESERVED. PRINTED IN U.S.A.
Canadian GST Reg. #R123482887.

MPA

PENN STATE INDUSTRIES PRESENTS . . .

#SVS Variable Speed Scroll Saw . . . only $169.95

Cuts intricate patterns in many different materials. Electronically controlled motor gives full power at all speeds 400-1800cpm.

FREE: Dust Blower, 1 dz blades, EZ Set permanent top arm blade holders, EZ jig, 4 blade holders, Neptune 1-1/2" lettering guides w/6 patterns.

Specs • Motor: 1.3 Amp, 110V • Throat: 15" Deep • Stroke 3/4" • Tilt 0-45°left • Cut depth: 2" • Blades: uses pin & plain end

#SVS ... $169.95 (UPS $10)

All Penn State Dust Collectors now have High Filtration 30 Micron Bags

NEW

#S69 6" x 9" Two Way Sander only $219.95

Features:
- Dust collection outlet on belt
- Table tilts to 45°
- Sealed Ball Bearings

Includes: • Stand • 9" Disc • 6"x48" Belt • 3/4 HP, 1720 RPM
- **FREE** Belts & Discs worth $20.00

#S69 ... $219.95 (UPS $30)

#S48 4" x 8" Two Way Sander only $109.95

Features:
- Dust collection outlet on belt • Table tilts to 45°
- Sealed Ball Bearings
- Easy belt tracking

Includes:
- 8" Disc • 4"x36" Belt
- 1/3 HP, 1720 RPM
- **FREE** Belts & Discs worth $17.00

#S48 ... $109.95 (UPS $8)

#DC3 750 CFM Portable Dust Collector only $209.95

This 1-1/2HP model is lightweight and portable at less than 50 lbs.
- 1-1/2 HP, 110/220V
- 1 outlet @ 4"
- 1 (30 Mic) Bag @ 20 Gal.
- 46 lbs. • 750 CFM
- **FREE** 8' of hose, 1ea. 4" to 3" adaptor & 1 ea. 4" to 2" adaptor. $15 Value

#DC3 ... $209.95 (UPS $10)

#DC1-B 700 CFM Dust Collector only $209.95

This 1HP model is perfect for hookups to almost any single machine.
- 1HP, 110/220V
- 2 outlets @ 4"
- 2 (30 Mic) Bags @ 25 Gal.
- 66 lbs. • 700 CFM
- **FREE** 8' of hose, 1ea. 4" to 3" adaptor & 1 ea. 4" to 2" adaptor. $15 Value

#DC1-B..$209.95 (UPS $20)

#DC2 900 CFM Dust Collector only $299.95

This 1-1/2HP model allows for use in two or more machines. Improved service for long runs of hose.
- 1-1/2HP, 110/220V
- 2 outlets @ 4"
- 2 (30 Mic) Bags @ 30 Gal.
- 130 lbs. • 900 CFM
- **FREE** 50' of hose, 1ea. 4" to 3" adaptor & 2 ea. 4" to 2" adaptor. $40 Value

#DC2 ... $299.95 (UPS $30)

#DC4 1900 CFM Dust Collector

Intro price **only $540.00**

This new 3HP model is suitable for collecting from 3 machines simultaneously. DC4 is perfect for the small to med. sized shop or commercial/industrial applications.
- 3HP, 220V • 3 outlets @ 4"
- 2 (30 Mic) Bags @ 40 Gal. & 2 (30 Mic) Bags @ 60 Gal.
- 200 lbs. • 1900 CFM.

#DC4 . . . $540.00
(Call for F.O.B. freight charge)

Wood Lathe XL 40-2

Reg. $319.95 . . . on Sale . . . **only $239.95**

Tailstock center removes to allow attaching drill chuck.
Specs. • Motor: 3/4HP, 5 Speeds: 660-2850 RPM • 16" Swing • 40" centers •3/4 x 16 tpi spindle
FREE • 8 piece chisel set • 6" faceplate • spur center

Lathe . . . **#L42 ... $239.95** (UPS $20)
Stand . . . **#LST ... $44.00** (UPS $6)

Make Precision Cabinet Maker Cuts

Portable Panel Saw System

A special ball bearing tracking system that works with any hand held circular saw.

Includes:
- Tracking Fixture
- 64" Short Fence
- 108" (9') Long Fence

#PPS-B
Special Offer
$89.00
(UPS $10)

5 Speed Drill Presses

- Motor, 1.2 HP TEFC
- 13-3/4" Swing
- 5/8" JT3 Chuck
- 11" x 11" Square Table
- Work Light included
- Table Tilt 90°
- Table Swivel 360°
- Rack Table Elevator

Table Top Model
#DPT ... $179.95 (UPS $25)

Floor Model
#DPF ... $219.95
(UPS $30)

Carba-Tec Mini-Lathe . . . only $239.95

This mini-lathe is loaded with large lathe features: #1 MT headstock/tailstock with 3/4 x 16 tpi spindle • Quality split-bed design.

Includes: Spur center • Live tailstock • 3 toolrests • 2" faceplate • 2 belts (Motor *NOT* included)

#CML ... $239.95 (UPS $6)

#CML

Motor . . . **#CMO $65.00** (UPS $4)

NEW

Threadmaster only $239.95

A unique new treadmaking accessory for lathes. Fits all split bed, double rail designs. Avail. for 3/4" x 16, 1" x 8 and Shopsmith 5/8" spindles. **Includes:** H.S.S. threadcutting tool • Work/feed unit with 10 tpi thread-maker screw.

only . . . $239.95 set
Call or write for details

Penn State Power Carver

A quality, professional style, bench top, flex-shaft carver at an affordable price. **Includes** • 1/4 HP Motor • Variable speed foot pedal • Shaft • Handset

#PPC with 5/32" Drill Chuck Handset
$119.95 (UPS $5)

#PP2 with 1/4" Collet Handset
$129.95
(UPS $5)

PENN STATE INDUSTRIES

Dept.W • 2850 COMLY ROAD • PHILA., PA 19154
For Information: 215-676-7609

ORDER TOLL-FREE 1-800-377-7297

Mastercard, Visa, Discover Cards Accepted
When ordering - Add UPS Shipping Charges as noted
Pennsylvania residents add 7% Sales Tax

Call or Write for our New 32 page Color Catalog.

CASCADE TOOLS, INC.

92C-107

ASK FOR YOUR FREE CATALOG!

ALL NEW!

BOESHIELD T-9®

NEW

Formulated by Boeing Co., this special spray penetrates deep and holds up the longest against corrosive environments. Safe for use on most paints, plastics and vinyls. (Non fluorocarbon) **This stuff is unbelievable!**

PART No. C3293 (4oz) ONLY $4.95
PART No. C3294 (12oz) ONLY $9.95

BLADE & BIT CLEANER

NEW

Your blades, bits and planer knives take a beating due to resin, pitch and grime build-up! Now all that gummy stuff can be removed easily and quickly. Just spray on, wait a few minutes, and wipe off. Done!

PART No. C3295 (10oz) ONLY $5.95

THICKNESS GAUGE

NEW

Measure lumber thicknesses and diameters in seconds. An indispensable tool for use when planing, turning and cutting. Another **must have** tool!

PART No. C3296 ONLY $11.95

TABLE SAW GAUGE

NEW

This table saw gauge really works! Quickly measure blade height or blade angle with this 2 in 1 tool. Available for either left swinging or right swinging table saws.

PART No. C3297 (RIGHT SWINGING) ONLY $16.95
PART No. C3298 (LEFT SWINGING) ONLY $16.95

VISA MasterCard DISCOVER

1-800-235-0272

CALL TOLL FREE 24 hrs. A DAY!

TALKING BACK

Print this article

We welcome comments, criticisms, suggestions, and even compliments. Send your correspondence to: Talking Back, Better Homes and Gardens® *WOOD*® magazine, 1912 Grand Ave., Des Moines, IA 50309-3379.

Filling in the groove

Regarding the letter in the October 1992 issue on covering the miter groove in the bandsaw, I too find the groove a problem as chips fall into it, messing up the "feed" in scrolling work. I solved my problem by cutting a piece of hardwood to fit snugly in the groove. On the front end I made a bevel on the underside. That way, on the rare occasion when I want to use the slot, it's easy to pop it out with a screwdriver or chisel.

—Kenneth Wolfe, Wausaukee, Wis.

"Groovy" idea number two

I also was irritated by the miter groove in my bandsaw. So, I simply filled it in with automobile body filler (Bondo), sanded off the excess, painted the filler black, and coated it with wax. Works great!

—Ken Trumbore, Oakland Park, Fla.

Router table has room to spare

I recently completed construction of the heavy-duty router table shown in your February 1990 issue. In building it, I couldn't let all that valuable space under the V-shaped bottom go to waste. So, I cut an opening in the lower right front to accept a 5½x7x11" drawer that rides on a pair of wooden guides. I also cut a 10x15" opening in the left side of the cabinet for a hinged door. I installed a shelf between the side and the V bottom. I used a 3½" base moulding instead of the 5½" recommended to, allow for more storage space.

—Robert Reed, Concord, Calif.

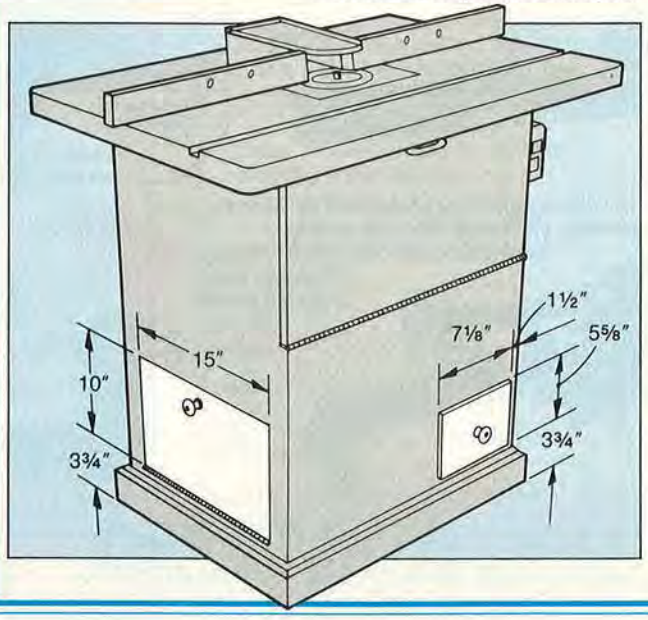

Hung up on our tablesaw hookup

Yours is the prettiest shop I ever saw. However, I'm not impressed with the dust-removal system at your tablesaw which requires a hookup every time you make a saw cut. Also, I found your workbench interesting, although the bench in your September 1990 issue, no. 37, appears more practical.

—Tom Moore, Madson, Va.

Tom, we're glad you like our shop. Flexibility, as well as mobility, served as two key objectives during our planning. That's why several stationary tools sit on mobile bases and why we set up our vacuum system to quickly and easily serve all of our stationary power tools (and many portables). The hose you see connected to the jointer/planer on page 58 *of issue 54 can be pulled off and fitted on the metal tube extending up from the tablesaw in about 10 seconds. (Also, see the cover of issue 54.) Without hooking up both tools directly to the system, we felt that this approach allowed for an efficient use of the vacuum system without stealing from its suction strength.*

In search of our mitersaw cabinet plans

I was delighted with your shop. Of particular interest was the setup you used for the mitersaw. I kept looking for the details on the cabinet and fence for this tool. I know you omitted it due to lack of space and it will be in the next issue, right?

—Jerry Patty, Tifton, Ga.

Actually, Jerry, our mitersaw cabinet is history, appearing in our February 1992 issue, no. 50. If you don't have that issue, you can get it by writing to us using the Talking Back address listed below. Include $2 and a self-addressed, stamped envelope with your request for the "Mitersaw Cabinet" plans.

Use our best address

Over the last year, we changed our editorial mailing address. Some folks who write use an address out of an old issue of WOOD® *magazine. When this happens, letters may take several weeks before we ever see them. For a more speedy response, please use the following:*

WOOD *magazine*
1912 Grand Ave.
Des Moines, IA 50309-3379.

Continued on page 8

veritas® Tools Inc.
INNOVATION IN TOOLS

Restore Stripped Screw Holes Fast & Easy

The Plugger™ will ream a stripped screw hole at 16°, exactly the taper of a standard crank-type pencil sharpener. You can easily make your own plug from scrap wood, glue it in, and reinstall the screw. The Plugger™ is a four flute, well sharpened reamer with a 3/8" (10mm) shank. Comes with 70" of dowel.

The Plugger™

The Plugger™
05J14.01 $11.95
(Tax & Shipping extra)

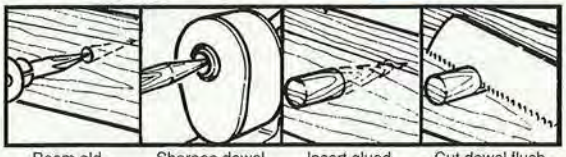

To order The Plugger and/or receive a **Free Tool Catalog** call our toll free number: **1-800-667-2986**
Ask for Department # WM2

Veritas Tools Inc., 12 East River St., Ogdensburg N.Y., 13669

Also available from: • Constantine's • Hartville Hardware • Woodcraft Supply • Garrett-Wade • Lee Valley Tools • Woodworker's Supply and other quality tool outlets.

ROBLAND X 31
THE INTELLIGENT ONE MAN SHOP

90-MINUTE DEMO VIDEO

- 1100 lbs.
- 3 separate 3HP motors
- 12" jointer
- 12" planer
- 10" table saw
- 50" sliding table
- 3HP shaper
- mortiser
- cast iron

The Robland X 31
is designed to make maximum use of minimum space ideal for the small professional shop and the demanding hobbyist. Change from one tool to another in 20 seconds or less! Solid, sturdy, reliable.

CALL OR WRITE FOR MORE INFORMATION NOW!

2081 LAGUNA CANYON RD., LAGUNA BEACH, CA 92651

LAGUNA TOOLS

1-800-234-1976 or 714-494-7006

"All my tools should be this good!"

The **Accu-Miter®** is a professional miter gauge that makes perfect angles easily. Shot-pin action assures dead-on accuracy for common angles — plus a precise protractor scale for everything in between!

We do not recommend operating without the saw blade guard, as is shown here.
US Patent #5,038,486

Optional accessories: manual clamp– pneumatic clamp– 3/8" x 3/4" miter bar–

JDS COMPANY

Precision Woodworking Equipment

Call or write for our free brochure.

800 Dutch Square Blvd., Suite 200, Columbia, SC 29210
1-800-382-2637 / SC 803-798-1600

$149

STEVE WALL LUMBER CO.

Quality Hardwoods and Woodworking machinery For The Craftsman and Educational Institutions

Ash	4/4	Select	1.90	$ 62.00
Basswood	4/4	Select	1.35	$ 50.00
Birch	4/4	Select	1.60	$ 56.00
Cherry	4/4	Select	2.55	$ 71.00
Cypress	4/4	Select	1.65	$ 52.00
Hickory	4/4	Select	1.50	$ 50.00
Mahogany (Genuine)	4/4	Select	2.75	$ 76.00
Maple (Hard)	4/4	Select	1.75	$ 55.00
Maple (Soft)	4/4	Select	1.40	$ 49.00
Pecan	4/4	Select	1.50	$ 50.00
Poplar	4/4	Select	1.20	$ 48.00
White OR Red Oak	4/4	Select	2.00	$ 60.00
Walnut	4/4	Select	2.75	$ 74.00
Cedar (Aromatic Red)	4/4	1C+Btr.	1.40	$ 49.00
White Pine	4/4	FG.	.95	$ 40.00
Yellow Pine	4/4	Clear	1.20	$ 48.00

Above prices are for 100' quantities of kiln dried rough lumber sold by the Bd. Ft. FOB Mayodan, NC. Call for quantity discounts. Other sizes and grades available.

UPS Special

Above prices are 20 bd. ft. bundles of clear kiln dried lumber 3"-10" wide - 3'-7' long (Random widths & lengths) Surfaced 2 sides or rough. Delivered UPS prepaid in the Continental U.S.

LUMBER SPECIALS

MAHOGANY 100 Bd. Ft. Bundle #1 Common S2S 13/16 $175*
WALNUT 100 Bd. Ft. Bundle #1 Common 6/4 $140*
*FOB Mayodan - Motor Freight Only

EXOTICS: Bloodwood $7.00 • Canary Wood $8.50
Rosewood $9.50 • Tulip Wood $11.00
Others Available

STEVE H. WALL LUMBER CO.
BOX 287 • MAYODAN, N.C. 27027
919-427-0637 • 1-800-633-4062 • FAX 919-427-7588

Send $1.00 For Lumber and Machinery Catalog

TALKING BACK

Continued from page 7

LTV finish stands the test of time

Art Carpenter's "LTV" finish, [stands for linseed oil, turpentine, and varnish] featured in your September 1992 issue, is one that I have used for years. Originally, I found the formulation in a classic book by Ralph Parsons Kinney, *The Complete Book of Furniture Repair and Refinishing,* published by Scribner and Sons in 1950. The use of polymerizing oil sealer, as suggested by Carpenter, is a "modern" improvement over the previously recommended dilute varnish.

—George Bryan, M.D., Galveston, Texas.

Another good sheet-goods dolly design

Your tips from the IDEA SHOP™ in your September 1992 issue are great and very helpful. I'd like to make a suggestion, though, on the two-wheel dolly on *page 17.* I have borrowed a dolly design from the glass industry and built one that is very similar. It allows for one person to handle a single sheet with one hand and doesn't require balancing the sheet. The casters allow for ease of turning, and I can hang the whole unit on the wall when I'm not using it. Actual dimensions can vary, depending on your needs. Most types range from 36" to 48" long. A single 2x4" board can be used for the body.

—Roger Studenski, Orange Park, Fla.

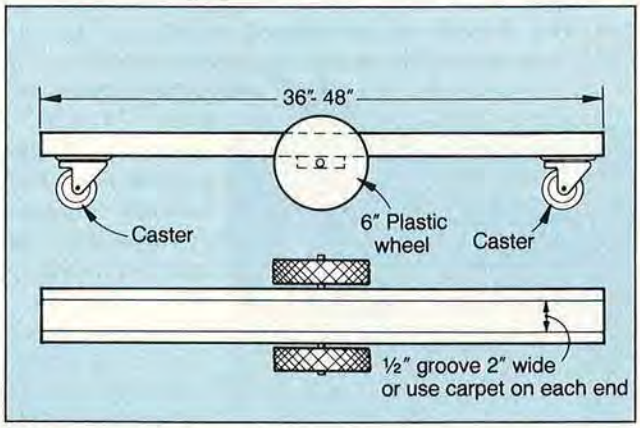

If trees are your thing, you're going to like this book

In the October 1992 issue, the article on butternut struck me as one of the best I've read. It offers precisely the type of information I have been searching for unsuccessfully. I really want a book that has information on North American trees, including pictures identifying them. What is your source?

—Randel Rogers, Evanston, Wyo.

Randel, we've found Knowing Your Trees, *one of our best sources on North American trees. You can order a copy for $12.50, ppd., through American Forests, P.O. Box 2000, Washington, DC 20013.*

Dowel makes great drum sander

I was delighted to see your "King of the Caterpillar" project in the August 1992 issue. One problem: It was not easy to slide the pieces apart due to curved cuts caused by the scrollsaw blade bending. My smallest drum sander was too large to fit the "throat" of some of the pieces. I solved this by using a 4" piece of ½" oak dowel. I sawed a 3" slot down the middle, then inserted the end of a 2x11" piece of sandpaper in the slot, wrapping the rest of the sandpaper around the dowel. I chucked the cut end in the drill press, making a sort of "flap sander." It automatically compresses when pushed into the throat of the workpieces. Another advantage: As the end wears, just cut off for fresh sandpaper.

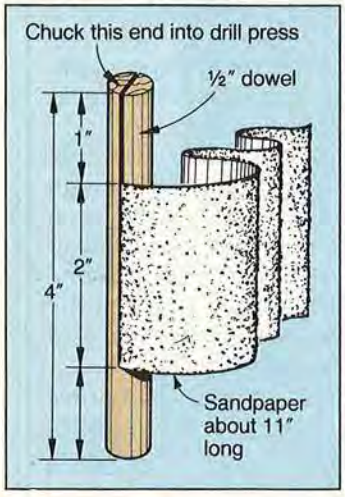

—Ian Hamilton, Sidney, B.C., Canada.

Caterpillar: king of the garden

Just had to write and let you see what my husband did with the "King of the Caterpillars" puzzle pattern in your August 1992 issue. Instead of cutting out the puzzle pieces as you illustrated, he left the caterpillar intact. Then, he drilled holes in the bottom edge and inserted dowels. We finished them as you instructed, but with exterior paint. Finally, we put them in the flower garden and the yard. He also reduced the pattern to make smaller versions—very cute.

—Audrey and Alan Lightner, Watsonville, Calif.

A NEW KIND OF TIME MACHINE
Will Add Hours to Your Day

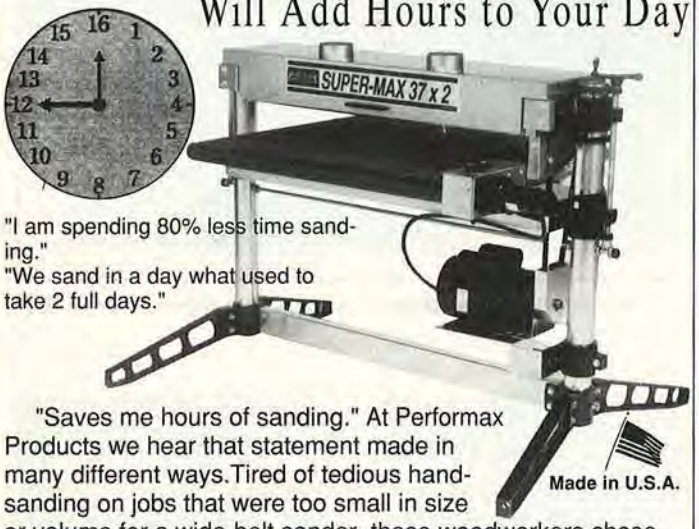

"I am spending 80% less time sanding."
"We sand in a day what used to take 2 full days."

"Saves me hours of sanding." At Performax Products we hear that statement made in many different ways. Tired of tedious hand-sanding on jobs that were too small in size or volume for a wide-belt sander, these woodworkers chose an affordable solution to their sanding needs. What they got for their money exceeded their expectations.

The Super-Max 37x2, at $3495 plus freight, is the only dual drum sander with patented abrasive fasteners and an easily adjustable second drum for any combination of abrasives.

Add hours to your day. Call for a free brochure and the dealer nearest you.

PERFORMAX PRODUCTS, INC.

1-800-334-4910
or (612) 895-9922

12211 Woodlake Drive, Dept. WD07, Burnsville, MN 55337

Econ-Abrasives
WE MAKE ABRASIVE BELTS ANY SIZE, ANY GRIT!

Standard Abrasive Sheets

CABINET PAPER

	50/pk	100/pk
60D	$15.00	$27.00C
80D	14.00	25.00C
100 thru 150C	13.00	23.00C

FINISHING PAPER

80A	$ 10.00	$17.00C
100 thru 280A	9.00	15.00C

NO LOAD PAPER(white)

100 thru 400A	$11.00	$19.00C

"C" = 100 SHEETS

Velcro® Vacuum Discs
8 Hole pattern for Bosch sanders

Dia.	Grit	Price
5"	60	$ .48ea
5"	80	.46
5"	100 thru 320	.45

** OTHER PRODUCTS **

*Wide Belts*Rolls*Flap Wheels
*Pump Sleeves*PSA Discs
*Router & Wood Bits*Wood Glue

ABRASIVE BELTS

PLEASE SPECIFY GRITS

1X30	$ .73 ea	3X24	$ .84 ea
1X42	.73 ea	3X27	.87 ea
1X44	.73 ea	4X21 3/4	.96 ea
2 1/2X16	.77 ea	4X24	.99 ea
3X18	.78 ea	4X36	1.20 ea
3X21	.81 ea	6X48	3.14 ea
3X23 3/4	.84 ea	2 1/4X80	2.94 ea

OTHER SIZES ON REQUEST

HEAVY DUTY SPRING CLAMPS
Clamps come w/PVC tips and grips.

Size	Price
4"	$1.75 ea
6"	2.25
8"	3.50

JUMBO ROUTER PAD(24" x 36")
It will not allow small blocks of wood to slip out under router or sanding applications. ROUTER PAD ONLY $8.95ea.

JUMBO BELT CLEANING STICK ONLY $8.80

*MasterCard, VISA, C.O.D. or Check
*SATISFACTION GUARANTEED!!!
*CALL FOR *FREE* CATALOG
- TX & NV add appropriate sales tax
- Continental U. S. shipping add $5.50

Econ-Abrasives
P. O. Box B865021
Plano, TX 75086
(214)377-9779

TOLL-FREE ORDERING LINE (800) 367-4101

Print this article

EARN CASH, PRIZES FOR YOUR TOP SHOP TIP

Do you have a great shop tip (or two) you'd like to share with other *WOOD*® magazine readers? For each published submission, you will get at least $40 from *WOOD* magazine (as much as $200 if we devote a page or more of space elsewhere in the magazine to your idea). You also may earn a woodworking tool for submitting the Top Shop Tip for the issue.

We try not to use shop tips that have appeared in other magazines, so please send yours to only one. *We do not return shop tips.* Mail your tip(s), address, and daytime phone number to:

Top Shop Tip
WOOD magazine
1912 Grand Ave.
Des Moines, IA 50309-3379

Florist's wire improves dust-blower arrangement

The plastic tubing from the dust-blower on some scrollsaws won't stay aimed at the cutting area.

TIP: Wrap the end of the tubing with florist's wire, the kind used to make artificial-flower stems or to arrange real flowers. (You also could use soft mechanic's wire or baling wire.) Space the wraps to make the tube look as if it has a spring wound around it. Now, you can bend the plastic tubing and aim it where you need to. The wire will help it stay put.

–Carl Dachs, Englewood, Fla.

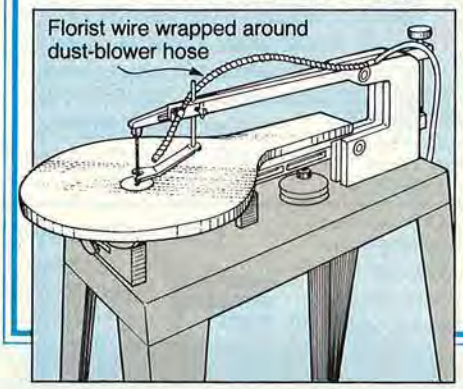

Clampless fence makes router setup fiddle-free

Fiddling with clamps for the fence each time you change your router-table setup becomes tiresome. It would sure be nice to have an adjustable fence.

For his tip, Joe receives a Dubby cut-off fixture, shown below.

TIP: Add an adjustable fence to any router table—wood or metal—using eyebolts and metal electrical conduit. Cut two pieces of ½" conduit long enough to reach from end to end on your router table. Drill a ¼" hole about ¾" from each end of each piece (make sure the holes on each end are aligned). Drill matching bolt holes or pilot holes in the router table. Slide a 5/16×2" eyebolt onto each conduit, and then attach the conduits to the table using washers or short pieces of tubing as spacers where shown.

For the fence, cut a piece of ¾×1½" hardwood long enough to extend about 1" beyond each side. Cut a notch in each end to accept the eyebolt shank and one to clear the router bit. Tighten the fence down with a washer and wing nut on each eyebolt.

–Joe Bodi, Toledo, Ohio

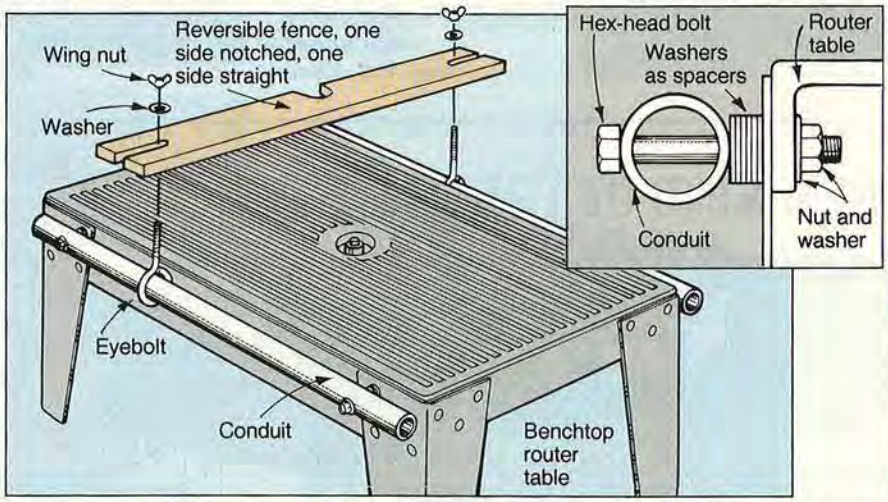

Sawing off a lid is easier if you don't quite cut it

When separating the lid from a small box using a tablesaw, the parts can pinch together, making things go haywire in a hurry.

TIP: Set your tablesaw's cutting depth about 1/64" less than the thickness of your box sides and ends. Then, cut along the lid separation line as usual; the two parts will remain joined. Complete the job by cutting the lid free with a craft knife and sanding the edges of the lid and box.

–Arthur Conway, Biggera Waters, Queensland, Australia

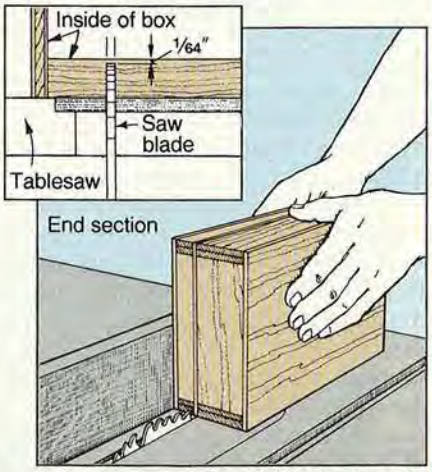

Continued on page 12

The American Toolmaker

RBI Woodplaners

THE BEST BUY FOR YOUR MONEY IS THE rbi 4-IN-1 WOODPLANER.

PLANE–MOLD–SAND & SAW.

Gain the added satisfaction of knowing you've done everything you can–start to finish–to make each woodworking project your best. Think of all the ways this versatile tool could add to your workshop.

WHY BUY THE rbi WOODPLANER?

- We built the original 4-in-1 machine and 64 years of experience speaks for itself.
- Patented quick change cutterhead, makes the change from one function to another–faster and easier than any other machine.
- Planetary Belt Drive–automatically adjusts cutterhead speed to drive speed allowing for a constant smooth finish end to end.
- American-Made–We take pride in being a World-Class U.S. manufacturer in the woodworking industry.
- 3 Year Warranty (1 year on motor) and 30 Day In-Shop Guarantee prove we are confident in our equipment and our people.

As a thickness planer...
finish your own lumber to meet your exact specs without paying custom milling fees.

As a molder...
create special picture frames, window trim, crown moldings and more from over 350 standard patterns plus unlimited custom patterns.

As a sander...
replace hours of hand-sanding with just one pass.

As a gang saw...
gang-rip lumber accurately to your own specifications with a finish as smooth as a jointed edge.

SOME STRAIGHT TALK FROM AN rbi OWNER

"I bought a 20" planer over 2 years ago, and I'm glad I did. The planer is ideal for us because we use all 4 functions, and there's nothing to changing the various heads. We do alot of molding, and will even run 3 moldings at once. I really like that it is made in the U.S.A.

T. Petronio, New York

C11

rbi industries, inc.
The American Toolmaker
1801 Vine St. • P.O. Box 369 • Harrisonville, MO 64701

Call Today for FREE INFORMATION KIT! 1-800-487-2623

WHY ARE WE PRACTICALLY "GIVING AWAY"

"347 WOODWORKING PATTERNS FOR ONLY 2¢ EACH?"

IF YOU LIKE TO CUT PATTERNS OUT OF WOOD, THIS IS THE SET FOR YOU! YOU'LL FIND A TREASURE HOUSE OF IDEAS INSIDE. 347 BEAUTIFUL WOODWORKING PATTERNS AND DESIGNS.

(By Frank K. Wood)

FC&A, a Peachtree City, Georgia, publisher, announced today that it is practically "giving away" an all-new set of *"347 Woodworking Patterns."*

- Curvy curios, charming country cats.
- Sturdy shelves, shadow boxes, showy plaques.
- Victorian ladies and stylish gents.
- Rack up your spices, spice up your den.
- Holders for candles, napkins and canes.
- Folk art, Shaker art, modern art, too.
- Gaggles of geese, or a goose all alone.
- Hanging hearts, huggable bears.
- Doorstop decorations, welcome signs.
- Whizzing whirligigs, models of planes.
- Take flights of fancy with fairies and gnomes.
- Birthday surprises, decorations for major events.
- Dancing bear, prancing pony, soaring eagle.
- Circus animals and barnyard critters.
- Childhood favorites, Noah and the Ark.
- Tulips, bluebirds, springtime motifs.
- Comic cartoons, comfy coat rack.
- Summer garden helpers, lawn deco art.
- Tick-tock clock, chug-along train.
- Bunnies for Easter, rabbits to hang on the wall.
- Front door welcome, back door friends.
- Graceful swan, gangly goose, waddling duck.
- Rocking horse, weather vane, mirrored sconce.
- Angels of love, Christmas and song.
- And much, much more.

Build all these wooden favorites. Illustrated plans include full-size patterns and complete instructions. To order a set, just return this notice with your name and address and a check for $7.99 plus $2.00 shipping and handling, and we will send you *"347 Woodworking Patterns"* right away. Or, for only $9.99 plus $2.00 shipping and handling, you can get both the basic set and an extra 100 large patterns.

Send your check along with your name and address to: **FC&A, Dept. NWZ-2,** 103 Clover Green, Peachtree City, GA 30269.

You get a no-time-limit guarantee of satisfaction or your money back.

You must cut out and return this notice with your order. Copies will not be accepted!

IMPORTANT — FREE GIFT OFFER EXPIRES MARCH 31, 1993

All orders mailed by March 31, 1993, will receive 50 special, seasonal, woodworking patterns as a free gift, guaranteed. Order right away!

©FC&A 1993

TIPS FROM YOUR SHOP (AND OURS)

Continued from page 10

Scrollsaw picks up dust instead of spreading it

Whenever you scrollsaw, the blower puffs a lot of sawdust onto you and into the air. You'd sure like to keep the dust under control.

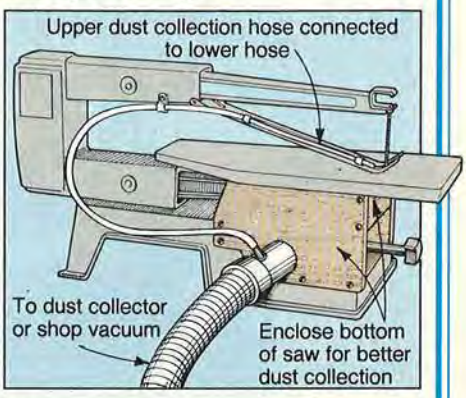
Upper dust collection hose connected to lower hose
To dust collector or shop vacuum
Enclose bottom of saw for better dust collection

TIP: Cut ⅛" plywood or hardboard to enclose the area beneath the saw table, and then bore a hole in it to accept a connector for the hose from your shop vacuum or dust collector. (Bore the hole in the existing sheet-metal cover, if your saw has one.) Be sure your modifications don't make it impossible to tilt the table and change the blade.

Drill a ½" hole into one side of the hose connector, and epoxy-glue a 2" length of ½" (outside diameter) copper tubing into it. Slide the end of a piece of ½" (inside diameter) vacuum-line hose (from the auto-supply store) over the tubing. Route the hose around the saw throat to the hold-down foot. Now you have a double-duty dust collector for your scrollsaw, one that picks up dust at the blade and below the table.

–Donald Diller, Coldwater, Ohio

Threaded inserts go straight with simple installation jig

Methods for driving threaded inserts often rely on a drill press for accuracy. What do you do when your workpiece is too big for the drill press or the insert goes into a built-in unit?

TIP: Put together a jig like the one shown *below* as follows: Drill a centered ¼" hole (or one that fits a bolt that threads into the inserts you're using) ¾" from one end of a ¾×2×5" piece of scrapwood. Glue that piece on top of a ¾×3×4" block, forming a lapped T. Insert a ¼×2½" hex-headed bolt through the hole, and put a nut on it.

Now, screw the threaded insert onto the bolt about ⅜" and run the nut down to jam the insert. Hold the jig against the workpiece with the insert over its hole, and turn the hex-head of the bolt with a wrench to drive the insert in. (A ratchet handle with a socket speeds the job.) When the insert is in place, hold the bolt head with one wrench and back off the jam nut with another.

–Paul R. Cook, Westfield, N.Y.

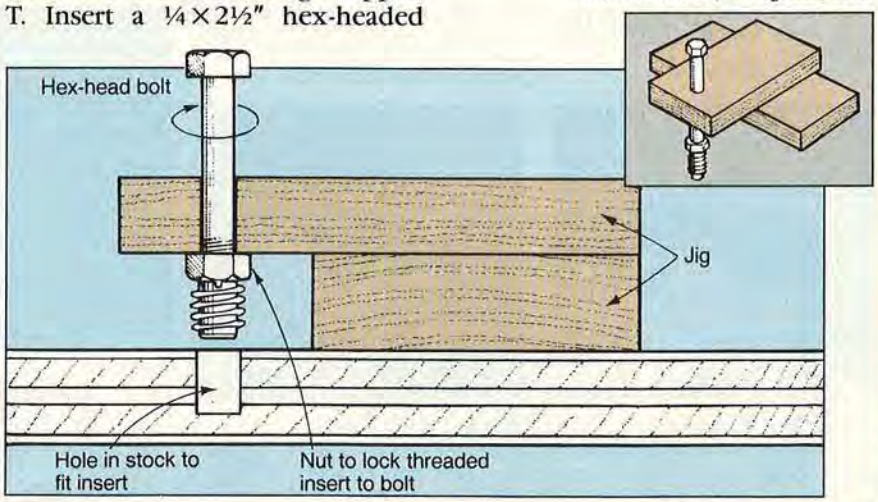

Continued on page 14

Buy 1 tool, get our 232 page tool free.

Here are just a few of the more than 3,500 unique woodworking tools that can be found in our most versatile tool – the 1993 Garrett Wade Catalog.

The 232 page catalog is Free with any order from this ad. Or if you just want the catalog, send us $4.00, along with your name and address.

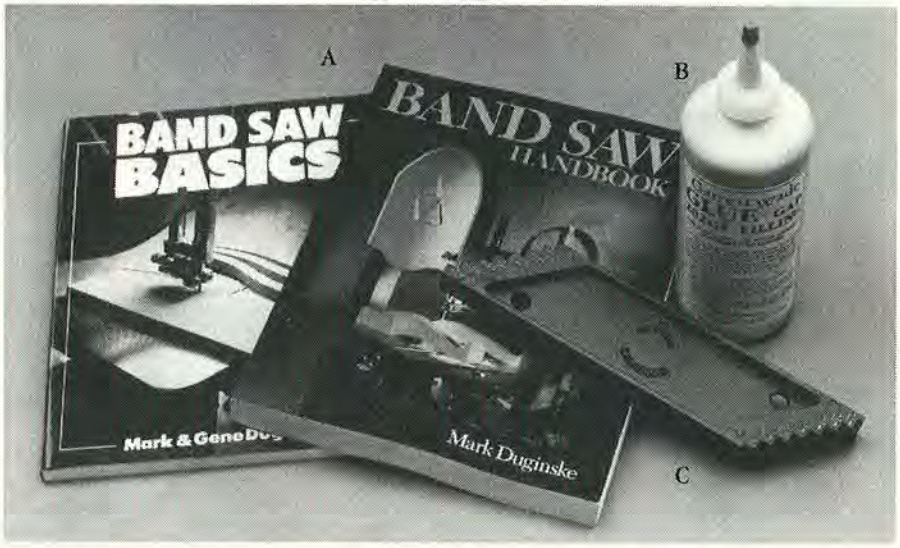

A/ Two Band Saw Books *by Mark Duginske*
Learn what makes your bandsaw tick. Tune-up and maintenance, blade selection, tracking and tensioning, plus cutting methods for woods and other materials. Unlock your saw's potential.

02L09.03	Band Saw Basics	$ 9.95
16L04.02	Band Saw Handbook	$16.95

B/ Our Unique 202GF Glue Fills Gaps
It has a very high solids content, so small gaps in joinery are actually filled – with strength. The "squeeze-out" beads right up and chips off when dry – no soaking in to ruin finishes. Woodworkers who use this special glue swear by its superiority. Dries to a light tan. Water clean-up.

62J01.01	1 Pt. 202GF Glue	$ 7.25
62J01.03	1 Qt. 202GF Glue	$13.10

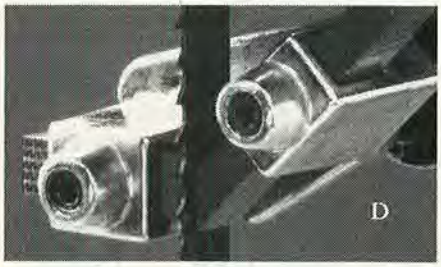

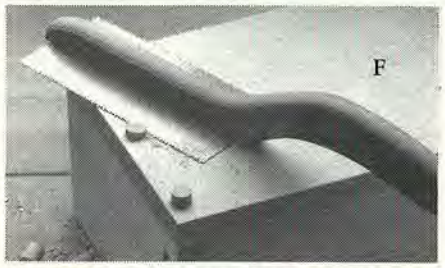

C/ The Saw Setting Gauge That Can Be Read From Any Position
This 9" long aluminum gauge is ¾" thick – wide enough to ensure that the blade is always gauged at the top of its arc. It has accurately machined ¼" graduations on one end, and ⅛" graduations on the other. It will indicate any blade height from ⅛" to 2". Markings read vertically on one face, and horizontally on the other. Extremely useful for table saw set-up, and handy for routers too.

71K26.02	Saw Setting Gauge	$17.95

D/ Special Bandsaw Cool Blocks® Prolong Blade Life & Increase Accuracy
Made of a special graphite-impregnated phenolic laminate, the set of 4 replaces your saw's upper and lower side blade guides. Cool Blocks® run cooler and are more slippery than conventional steel guides, and give you better control since they can be set actually touching the blade.

33K09.01	A Delta 14"	$11.95
33K09.02	B Sears 12" (⅜" square)	$11.95
33K09.04	D Shopsmith	$12.95
33K09.05	E Old Sears (¼" round)	$11.95
33K09.06	F Jet 14" (& Delta copies)	$11.95
33K09.07	G Old Sears (5/16" round)	$11.95
33K09.20	K New Tilt Head Sears	$16.95

E/ 1/16" Super Narrow Scroll Cutting Bandsaw Blades Increase Your Saw's Versatility
You may have never seen a blade like this. A 24 tpi raker style, it produces smooth cuts while making incredibly tight turns. We recommend using our Cool Blocks® blade guides with these delicate blades, since they can be set closer to the blade without danger of overheating.

Cabinetmaker's Bandsaw Blades
A Garrett Wade exclusive. They look like regular raker blades but are actually ETS (Every Tooth Set) – a design normally available only on production blades. The result is a very smooth cutting blade that feeds easily. ¼" blade is for general work, and the ½" for resawing and heavy straight sawing.

93½" Blades (Delta 14" and copies)			
33K11.01	1/16"	24 tpi Scroll	$15.95
33K11.04	⅛"	14 tpi Scroll	$14.95
33K11.02	¼"	4 tpi Cabinet	$11.95
33K11.03	½"	3 tpi Cabinet	$12.95
80" Blades (Sears 12")			
33K12.01	1/16"	24 tpi Scroll	$14.95
33K12.04	⅛"	14 tpi Scroll	$13.75
33K12.02	¼"	4 tpi Cabinet	$10.95
33K12.03	½"	3 tpi Cabinet	$11.95
72" Blades (Shopsmith)			
33K13.01	1/16"	24 tpi Scroll	$13.40
33K13.04	⅛"	14 tpi Scroll	$12.50
33K13.02	¼"	4 tpi Cabinet	$10.25
33K13.03	½"	3 tpi Cabinet	$10.95

F/ French Flush Cutting Saw Makes Trimming Dowels & Plugs Easy
This double sided 6½" long blade has 11 tpi on one side and 20 tpi on the other, giving it more versatility than other flush cutting saws. It's also much less expensive. The teeth have no set on the bottom side, and very slight set on the top side to help clearance in the cut. The blade is bent slightly upward from the frame so the cutting action will not scratch the adjacent surface.

70I02.01	French Flush Saw	$15.95

Garrett Wade Co., Inc.
161 Avenue of the Americas
New York, NY 10013, Dept. 500

Or Call Toll-Free: 800-221-2942

Please send my tools plus a FREE 1993 Catalog.

Name

Address

City State Zip

☐ Check/Money Order ☐ Visa ☐ MC ☐ Amex

Card Number *Exp Date*

NUMBER	QTY	DESCRIPTION	PRICE	TOTAL
00.GW	1	1993 Main Catalog	$4.00	Free w. Order

Prices valid through September 14, 1993

Sub Total

Shipping Charges:
$2.95 up to $10
$4.55 for $10.01 to $20
$5.95 for $20.01 to $50
$7.25 for $50.01 to $100
$8.30 over $100

Shipping Cost

(NY State add Tax) Sales Tax

Grand Total

The Excalibur T-Slot Saw Fence and Companion Sliding Saw Table

EXCALIBUR

DESIGNED AS A COMPLETE SYSTEM TO PROVIDE YOU GREATER ACCURACY FROM YOUR TABLE SAW

NO RISK TRIAL PERIOD–LIFETIME GUARANTEE

- Quick, Easy Installation, Fits all Table Saws.
- Fence Locks on Both Front & Rear Guide Rails.
- Fence always stays Parallel to the Saw Blade

- Sliding Table
- –Cross-cut
- Stock up to 60" wide.
- Dual Measuring Scales. Accurate Cuts Guaranteed.
- More Features and Accessories than other Systems.

Excalibur Machine & Tool Co.
210 Eighth Street South
Lewiston, NY 14092
416-291-8190

If you have access to a FAX machine and wish to receive immediate information, call (800) 361-8015 x710 and leave FAX number.

NEED EXTRA INCOME?

WOODCARVING

IS FUN AND PROFITABLE

Want to carve decoys, statues or gun stocks?

It's easy when you use the Dupli-Carver Series wood carving machines. A patented five axis carving action allows these machines to complete difficult undercuts and contours as no other machine can. Complete machines available starting as low as $359.00.

SEND FOR OUR FULL LINE BROCHURE AND PRICE LIST AND START PLANNING YOUR FULL OR PART-TIME BUSINESS.

MARLIN INDUSTRIES, INC.
Rt. 70, Box 191, Dept D32
Cashiers, NC 28717
(704) 743-5551

Add Music & Movement To Wood Projects!

The Woodworker's Complete Source for Musical Accessories!

- Wind-Up Musical Movements
- Electronic Musical Movements
- Water Globe Kits
- Blinking Musical Lights
- Carousel Horses & Accessories
- One of the Largest Selections of Tunes Anywhere!

Unicorn Studios
Musical Movements & Accessories
P.O. Box 370-DB • Seymour, TN 37865

For a full-line catalog, send $1

Wood-Mizer®

World's Largest Manufacturer of Portable Sawmills

Own a Sawmill!
Start a Profitable Business!

Save money cutting your own lumber, make money cutting for others.

1-800-553-0219

32 Page Full Color Catalog – $2.00
66-minute demonstration video–$10.00
MasterCard or Visa accepted

8180 West 10th Street • Dept. QQ69
Indianapolis, Indiana 46214-2400

Since 1952

THE HANDIEST OUTLET DESIGNED

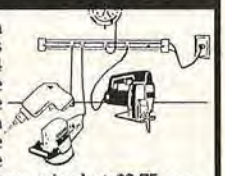

Tap-A-Line units can be ordered in lengths from 3-10 feet with 4 foot cords. Tap-A-Line can be mounted above or below work bench and all tools can be available for immediate use. Tap-A-Line units are priced at $2.75 per foot, 100% guaranteed and are shipped U.P.S. within 72 hrs. of order. Florida residents add 6% sales tax.

TAP-A-LINE Products, Inc.
461 N.E. 28th Street
Pompano Beach, FL 33064
305-942-2948 ◆ FAX 305-943-8163
◆ CHECKS ◆ MONEY ORDER ◆

MILLIONS SOLD ◆ MADE IN U.S.A.

BUILD YOUR OWN QUEEN ANN FURNITURE

With Our Kits

SOLID CHERRY, WALNUT OAK, MAHOGANY

OVAL COFFEE

COFFEE

END

FREE BROCHURE DESCRIBES
LIVING ROOM / DINING ROOM PIECES

Adam's Wood Products, Inc.
DEPT. M11, 974 FOREST DRIVE, MORRISTOWN, TN 37814

TELEPHONE 615-587-2942
FAX 615-586-2188

TIPS FROM YOUR SHOP (AND OURS)

Continued from page 12

Yes, you can organize dowel-rod odds and ends

Woodworkers usually end up with an odd assortment of dowel rods. Long pieces and short ones in many diameters defy logical organization—usually no two are alike. What's to be done?

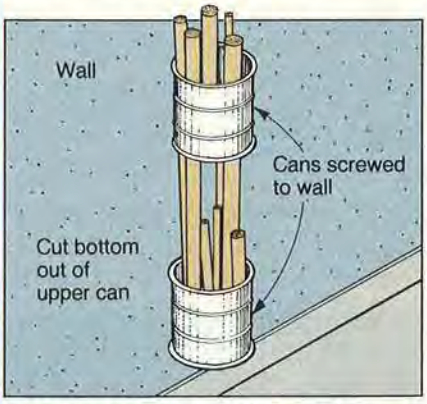

TIP: To store a lot of dowels neatly, get a couple of large, empty cans. (Restaurants or institutional kitchens often have really large ones.) Attach one to the wall about 6–12" above the floor. Cut the bottom out of the other can and mount it about 12" directly above the first one.

–M. J. Delgado, Three Rivers, Calif.

MORE TIPS FROM OUR WOODWORKING PROS

- No matter what type of table you're building, try joining the tabletop to the apron rails with the special fasteners shown on *page 53*. They attach to the underside of the tabletop and fit into a ⅛" groove in the rails
- Even if you're not a carver, you'll still want to find out all about acrylic paints in the article on *page 48*. That's because acrylics work great for painting toys and craft projects, too.
- Looking for another way to form mortises? If so, see *page 52* for our method of laminating notched pieces together.
- Use our handy shop-made jig when cutting slots for splines in the ends of miter-cut pieces. It's shown on *page 55*.

DISCOVER THE ONLY BOOK CLUB EXCLUSIVELY FOR WOODWORKERS AND...

#80067-78 $21.95
1/2 Price: $10.98

#80054-78 $21.95
1/2 Price: $10.98

#80078-38 $14.95
1/2 Price $7.48

#80056-78 $21.95
1/2 Price: $10.98

#80102-38 $14.95
1/2 Price: $7.48

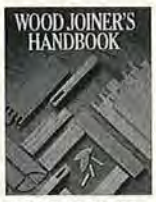

#80077-38 $14.95
1/2 Price: $7.48

#80116-38 $14.95
1/2 Price: $7.48

#80149-38 $14.95
1/2 Price: $7.48

#80076-93 $16.95
1/2 Price: $8.48

#80092-38 $14.95
1/2 Price: $7.48

#80074-38 $14.95
1/2 Price: $7.48

YOU HAVE NO OBLIGATION TO BUY ANY MORE BOOKS!

DUAL:
#43059-51 $19.90
1/2 Price: $9.95
Count as 1 selection.

#80094-93 $16.95
1/2 Price: $8.48

#80055-93 $16.95
1/2 Price: $8.48

#80070-61 $17.95
1/2 Price: $8.98

#80065-38 $14.95
1/2 Price: $7.48

#80072-93 $16.95
1/2 Price $8.48

#80090-38 $14.95
1/2 Price: $7.48

#80105-51 $19.90
1/2 Price $9.95

Take any book FREE

With another book at 1/2 Price!
(If you really like saving money you may choose a third book for just 1/2 price) with membership in Woodworker's Book Club.

As a member you'll receive your FREE 6 month subscription to Woodworker's Book Club NEWS. Each issue brings you the newest and best woodworking books...all at discounts of 15%-50%. You'll also find shop tips, special articles and guest columns where the pros answer all your woodworking questions.

You'll enjoy other membership privileges, too. Choose a FREE book every time you buy 4 from the NEWS...Get FREE postage and handling when you include payment with your orders from the NEWS. And you can relax knowing that every book you buy has a 10 day Money-Back Guarantee.

You can have all these privileges and much more with NO LIFETIME COMMITMENT and NO ENDLESS BOOK BUYING OBLIGATION! So join the only book club exclusively for woodworkers today!

#80059-61 $17.95
1/2 Price: $8.98

Dual:
#80063-80
$25.90
1/2 Price: $12.95
Count as 1 selection.

MEMBERSHIP PLAN

Every month you'll receive Woodworker's Book Club NEWS describing the Main Selection and 50 or more books for woodworkers. If you want only the Main Selection, do nothing and we will send it to you automatically. If you want a different book, or want nothing that month, just tell us on your Selection Card. You'll always have at least 10 days to decide and return your Selection Card. If late mail delivery ever causes you to receive a book you don't want, just return it at club expense.

You have NO OBLIGATION to buy any more books—you're just trying out the club for 6 months. After that, you may cancel your membership at any time. Each time you buy a book, your free subscription and membership will be renewed for the following 6 months. If you're ever unhappy with a book for any reason, just return it within 10 days for full credit or refund, no questions asked.

FREE Book Membership Certificate

☐ **YES!** I'd like to join Woodworker's Book Club! Send me my special New Member Books:

My FREE Book #_____ ..... $ FREE
My 1/2 Price Book #_____ ..... $ _____
plus postage & handling ..... $ 4.32
My optional 1/2 Price Book #_____ ..... $ _____
I get all this for just (Total) ..... $ _____

(Payment must accompany order; Ohioans add 5.5% tax.)
☐ Check enclosed (or)
Charge my ☐ VISA ☐ MasterCard Exp. Date_____

Acct #_____

I understand the membership plan and that I have NO OBLIGATION to buy any more books.

Signature_____
REQUIRED ON ALL CERTIFICATES

Name_____
(PLEASE PRINT)

Address_____

City_____

State_____ ZIP_____

Credit Cards call TOLL-FREE **1-800-937-0963**
9:00 a.m. to 5:00 p.m. Eastern time, Mon-Fri

Offer good in U.S. and Canada for new members only. Remit in U.S. funds. One membership per household. All applications subject to approval.
Please allow 3-4 weeks for delivery.

LAW4

WOODWORKER'S BOOK CLUB
P.O. Box 12171
Cincinnati, Ohio
45212-0171

MAKE NEW WOODEN YARD SWINGERS
FROM OUR FULL SIZE PATTERNS, & EASY TO FOLLOW INSTRUCTIONS!
YD62
CUT FROM STANDARD LUMBER!
YD61
YD36
HANG 'EM FROM YOR TREES OR FRONT PORCH!
$5.50 EA. COUPLE----ALL 3 ONLY $14.00
The Winfield Collection, Dept W23
1450 Torrey Rd, Fenton, MI 48430
Catalog of 1000 patterns $1.00 (free w/ order)
A SMALL BREEZE SETS THEM SWINGING!

NO EXPERIENCE NECESSARY
with... ARROW® STAPLE GUNS
Just load & shoot!
ARROW Staple Gun Tackers turn the difficult into the simple. From the professional to the do-it-yourselfer ARROW makes the job easier, go faster and less expensive. Whether you're building the new, repairing the old or pursuing a hobby in arts and crafts, ARROW has the right tool.
ARROW fastening tools, staples, Xpando fasteners, glue stix and rivets are available at all leading Hardware, Home Center and Discount Department Stores.
ETC-50 CORDLESS ELECTRIC STAPLE GUN
NEW
ARROW FASTENER CO., INC., 271 MAYHILL ST., SADDLE BROOK, N.J. 07662
IN CANADA: JARDEL DIST., INC., 6505 METROPOLITAN BLVD. EAST, MONTREAL H1P 1X9 QUEBEC

PRODUCTS THAT PERFORM

Crank-neck chisels work where other chisels won't

Like most woodworkers, I rely on my trusty set of traditional-style chisels for a multitude of workshop tasks including cleaning up mortises and ridding projects of glue squeeze-out. But sometimes, a typical chisel can prove awkward if you need to lay its blade flat on a work surface as you make a cut. At these times, you need a crank-neck chisel such as the one *below*.

Since these specialized chisels see limited use, I looked for an economically priced set and found it in my AMT catalog. The set includes chisels with ½", ¾", and 1" widths, and sells for under $50. Although these Taiwanese-made chisels lack a highly finished look, they have sturdy construction and I expect them to last for many years in my busy shop. Before putting them to use, I quickly honed the somewhat dull, factory-sharpened edges.

—Tested by Chuck Hedlund

Crank-neck chisels, $39.50 plus shipping ($4.50 east of the Mississippi river and $6 west of the Mississippi), from American Machine and Tool Company, 4th and Spring Streets, Royersford, PA 19468. Call 215/948-0400.

Titanium coating: It makes sense, sometimes

In the past couple of years I've seen more and more gold-colored drill bits and router bits popping up on the shelves of my local tool suppliers. These steel bits have a superhard titanium-nitride coating that manufacturers claim will extend the life of the bit and make for easier cutting and penetration. To verify these claims for myself, I ordered a set of titanium-coated router and drill bits from Vermont-American. Here's what I discovered in my tests.

The drill bits performed on a par with non-coated bits in hard and soft woods. Since the coating increases the cost of the bits by 20 to 40 percent, I'll stay with non-coated drill bits for woodworking. However, the coating did help the bits stay cooler, and maintain their cutting edges longer, when cutting metals. So, if you plan to do a lot of drilling in metal, the extra cost seems worth it.

The five-piece set of plunge router bits that I tried fill a niche need between non-coated steel bits and carbide-tipped bits. I prefer the coated bits over the other two types when I'm making plunge cuts with bits that see infrequent use, such as a keyhole cutter (or hang-slot bit as Vermont-American calls it). The coated bits cost considerably less than carbide-tipped bits and far outlast non-coated steel bits. Plunging cuts can really heat up a bit and dull its edge, but I found that the titanium-nitride coating helped the bits run cooler with less dulling of the cutting edges. The Vermont-American set that I tested consists of these bits: ½", straight, ¼" veining, ⅜" V-groove, ¼" panel pilot, and hang-slot.

—Tested by Bob McFarlin

Titanium-nitride-coated drill and router bits from Vermont-American. For more information or where to buy the products in your area, contact Marlene Meier of V-A at 704/736-8013.

Continued on page 18

TABLE SAW FENCES
T50 50" BIESEMEYER $ 294
X50 50" EXCALIBER 329
34-897 50" UNIFENCE 289

SENCO
not avialable in all areas
LS2 Pinner 5/8" - 1" $ 245
SFN1 1"-2" Finish Nailer 255
SFN2 Big Finish Nailer 375
SKS 1/4" Crown Stapler 247
T50 1hp *Turbo Oilless Pancake* Compressor 295
SLP 20 Pinner $249
shoots up to 1-5/8"

Emglo
AM78HC2 11/2 HP-1 tank 279
AM78HC4V 11/2 HP-2 tank 299

BLACK&DECKER
1166 3/8" Professional Drill $ 59
1311 1/2" Professional Drill 119
1350-09 Timberwolf Drill 254
1703 10" Miter Saw 178
2664K Cyclone 9.6v Cordless 129
2665K Cyclone 12v Cordless 148
2670 Impact Wrench 139
2750 Mini Grinder 79
3102-09 2 spd Cutsaw 99
3338 ELU Plunge Router 248
3380 Biscuit Joiner 244
14765 25pc Bullet Drill bit set 55

2720 1.5 hp Router 1/4" collet $119
2721 1.5 hp Router 1/2" collet 129

if you can plug it in...we've got it!
GREAT BARGAINS ON ALL YOUR FAVORITE TOOLS

Makita
LS1030 $199 10" Miter Saw
DA391D Cordless Angle Drill Tool Only $ 88
6211DW *NEW!* Cordl's Kit 189
9501BKW Mini Grinder Kit 97
9924B 3x24 Beltsander 147
BO4510 Pad Sander 49
BO4530 Round Pad Sander 59

SKIL
1605-2 Biscuit Joiner $ 118
5510 5 1/2" Trim Saw 109
5860 60° 8 1/4" Wormdrive 168
9645 7" Disc Grinder 119
9665 9" Disc Grinder 129
77 $139
7 1/4" Wormdrive Saw

Panasonic
EY571B 9v Cordl' Drill $ 127
EY571BC with case 139
EY6205BC 12v 15 min charge 169
EY970B 9.6v battery 39

TRI-GRIP
Clamp 'n Tool Guide: 50C $ 28.50, 36C 25.50, 24C 21.50
Back-to-Back Bench Clamp: BB50 $ 44.95, BB36 36.95, BB50 30.95

Milwaukee
0234-1 1/2" Magnum $116
0222-1 3/8" Drill $ 104
0224-1 3/8" Magnum 114
0244-1 1/2" Magnum 119
0235-1 0234 w/Keyless chuck 125
0375-1 3/8" RA Drill 127
0379-1 1/2" RA Drill 145
3300-1 RA Magnum 182
5392-1 3/8" Hammer Drill 114
6365 7 1/4" Circular Saw 119
6368 7 1/4" saw Kit 134
6507 VS Sawzall 134
6508 VS Sawzall 130
6539-1 Cordless screwdriver 74
6546-1 VS Cordl' screwdriver 78
6747-1 Drywall gun 0-2500 100
6750-1 Drywall gun 0-4000 90
6753-1 Drywall gun 3.5 amp 87
8975 Heat Gun 58
8977 VariableHeat Gun 74
6508 $130
2 range VS Sawzall

HITACHI
C10FA 10" Miter Saw $ 269
C7BD 7 1/4" circular Saw 125
CR10V Recipro Saw 116
DH38YE Roto Hammer 378
F20A Plane 89
M12V 3 1/4hp Plunge Rtr 223
SV12SA Palm Sander 47
TR6 Trim Router 94
TR12 Plunge Router 168
NAIL GUNS
NR83A Framing Gun 398
NT45A Finish Nailer 279
NT65A Finish Nailer 319
N5008AA Stapler 319
C8FB $438 Compound Miter Saw
NEW! CJ65VA $149 VS Orbital Jigsaw

PORTER+CABLE
330 Palm Sander $55
100 7/8 hp Router $ 95
315-1 7 1/4" Circular Saw 116
332 NEW! R.O SANDER 68
333 R.O SANDER w/bag 78
351 3x21 Belt Sander 134
352 3x21 Belt Sander w/bag 138
360 3x24 Belt Sander w/bag 178
361 3x24 Belt Sander 169
362 4x24 Belt Sander w/bag 187
363 4x24 Belt Sander 182
513 Lock Mortiser 679
550 *NEW!* Pocket Cutter 207
59381 Door Hinge Kit 165
690 1-1/2 hp Router 127
693 Plunge Router 164
6931 Plunge Base 74
659 Drywall Screwgun 79
695 1 1/2 hp Router Table 202
696 Router Table only 119
7310 Trim Router 84
9118 Door Plane Kit 198
9345 6" SawBoss Kit 122
9629 Recipro Saw 139
97310 Trimmer kit 187

RYOBI
NEW! Fine Detail Sander DS1000 $49
AP12 *NEW!* 12" Planer 425
BE321 3x21 Sander 127
BT3000 10" Pro Table Saw 539
BT3000W With Stand 589
JP155 6" Planer 295
JM100K Biscuit Jointer 204
JS045 Jig Saw 85
L1323ALSK Plane 125
R501 2hp Plunge Router 148
RE600 3hp Plunge Router 204
RJ100VK Reciprocating Saw 89
SC160 Scroll Saw 137
TFD170-2 9v Cordl's Drill -2 batt. 148
TFD220-2 12v Cordl's Drill -2 batt. 164
TS260 *NEW!* 10" Comp. Miter 215
NEW! Random Orbit Sander RS112 $49

HOOK & LOOP SANDPAPER
RYOBI 4 1/2"discs 10 count
PORTER/CABLE 5" discs 10 count
BOSCH 5" discs 10 count
MAKITA 5" discs 10 count
All GRITS,10pc.$4.95

STIKIT SANDPAPER
10 yards
Grit 4 1/2" roll: 80 10.95, 100 9.85, 120 9.85, 150 9.85, 180 9.85, 220 9.85
pieces 6" round: 100 pc 50 pc 50 pc 50 pc 50 pc 50 pc
5"round: 18.95 11.65 11.65 11.65 11.65 11.65
80 13.95 8.50 8.50 8.50 8.50 8.50

freud
94-100 5pc $157
Router Bit Cabinet Set
FT2000E Vs Plunge router $ 205
Professional Carbide-Tipped Blades
LU85M010 10" 80T Finish 57
LU84M011 10" 50T Combo 39
LM72M010 10" 24T Rip 37

BOSCH
1194VSR 1/2" Hammer Drill $ 138
11212VSR SDS Roto Hammer 194
1604K 1 3/4 hp Router kit 163
1609K 3-base Trimmer kit 164
1608U Underscribe Trimmer 117
1581VS $130 VS Orbital Jigsaw
3051VSRK With 2 batteries 139

SMARTLEVEL
SL224 2' Level w/sensor $ 54
PR24S 2' Pro Level w/module 87
PR48S 4' Pro Level w/module 104
SMA *Smart* Module only 79
PR24 2' Pro Rail only 19
PR48 4' Pro Rail only 39

STABILA
LEVELS - Hand holes. Two vertical vials. Two milled faces. Yellow coat.
2464 24" $ 36
2469 36" 39
2467 48" 45

USE VISA, MC, DISCOVER
FREE SHIPPING on orders over $50,
Within continental 48 states, HI and AK extra.
Sales limited to stock on hand.

ABBEY TOOLS
1-800-225-6321

1132 N. MAGNOLIA, ANAHEIM CA. 92801
OPEN 8-5:30 WEEKDAYS 9-2 SATURDAY
Calif. residents add 7.75% state sales tax
SERVING YOU FOR OVER 15 YEARS
Prices subject to change without notice

Unlock The Power Of Your Router!

Combine your router with the **Woodchuck Milling System** to perform sophisticated milling operations:

- ☐ **True & size stock**
- ☐ **Tapering**
- ☐ **Beading or fluting**
- ☐ **Hollow spirals**
- ☐ **Rope moulding**
- ☐ **Precision joinery**

Models available for the professional shop as well as the demanding hobbyist. **Demo Video available.**

No other tool, at any price, will make a greater impact on the precision, variety and and quality of your work.

Phantom Engineering, Inc.
1122 S. State St., #21 / Provo, Ut 84606
(800) 279-4570

GREAT ENCOURAGEMENT FOR SHIPWRIGHTS!

All gentlemen shipwrights and able bodied modelists who have a mind to provide for themselves amusement and satisfaction through the traditional craft of ship modeling, an opportunity now offers to acquire, through the minimal cost of one Colonial Dollar ($1.00), a catalog of fine and unique ship model kits, plans, books and fittings from the renowned company of Model Expo located in Mt. Pocono in the state of Pennsylvania.

Send $1.00 for a catalog to:

MODEL EXPO, INC.

Dept. WD23, PO Box 1000, Mt. Pocono, PA 18344

Name_____

Address_____

City_____

State_____ Zip_____

PRODUCTS THAT PERFORM

Continued from page 17

This spray-on product grounds airborne shop dust

Like most of you, when applying finishes to my projects, I work in areas near the dust-producing machines in my shop. I try to keep down the dust, but it always seems to wind up on the surfaces of my finished workpieces, resulting in less-than-glass-smooth finishes. Recently, I came across a product called DustFree that greatly reduces the amount of airborne dust in my shop.

This petroleum-based solvent attracts dust and holds onto it, keeping it from becoming airborne again. To test the product, I poured it into a plastic pump sprayer (the type used for spraying lawn-care products), and applied a fine mist to the floor of my shop. The liquid drastically reduced the dust in my shop's air, and made the dust easy to sweep up. I found that you must be careful not to apply too much. Otherwise, the product makes your floor slippery. You can apply it to wood, concrete, or dirt floors to help control dust. One gallon goes a long way and should last most home woodworkers many years.

—Tested by Bob McFarlin

DustFree dust-containment liquid, $36.25 postage-paid per gallon from Sherwin-Williams, 1800 E. Sheridan Ave., Des Moines, IA 50316. Call 515/265-5678 and ask for Darvin.

A better abrasive cleaner

I've been a fan of crepe-rubber-type abrasive cleaners for years. These sticks help you quickly clean abrasive belts and discs when you hold them against a moving abrasive. The result: greatly extended life for your abrasives. Now, I've come across a similar rubber-type cleaner that's better still.

The Nu-Life smoked-rubber abrasive cleaner is denser than crepe-rubber products. In my tests, it wore down at about half the rate of its competitors. And, it did a slightly better job of getting the embedded residue out of abrasive surfaces.

The Nu-Life cleaner has a distinctive—but not especially offensive—smoked odor. Although its competitors do not smell at all, I'll put up with the slight odor in exchange for the better results.

—Tested by Bob McFarlin

Nu-Life abrasive cleaner, $6.95 list price for a 1⅝ × 1⅝ × 8¼" stick. Other sizes are also available. Call Abrasive Service Co. at 203/584-2091 for the dealer nearest you.

Serving Woodworkers Everywhere!

Here's the new 1992-93 catalog!

Over 3,000 products!

- *Over 38 years of service*
- *12 retail stores*
- *48 hour mail order service*

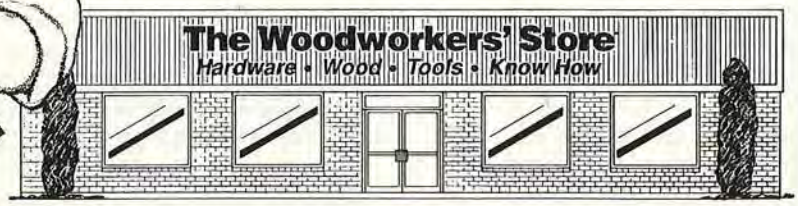

To receive a new 1992-93 catalog send $2.00 to:

The Woodworkers' Store
Dept. 23138, 21801 Industrial Blvd.,
Rogers, MN 55374, Or call (612) 428-3200

Visit a store near you!

- Boston area (Cambridge) • Buffalo area (Clarence) • Chicago area (Arlington Heights)
- Cleveland area (Parma) • Columbus • Denver • Detroit area (Royal Oak) • Seattle
- Milwaukee area (Wauwatosa) • Minneapolis, MN • Burnsville, MN • San Diego

The Woodworkers' Store®
Hardware, Wood, Tools & Know How

Be your own boss in one of today's fastest-growing fields. Be a home inspector!

Let NRI at-home training be your first step toward a business of your own where you can earn as much as $1,000 a day!

Home inspection is fast becoming one of today's hottest career fields. Already one out of every four homes sold is inspected ... and experts say demand is growing 30% to 50% a year. Plus, while the average job takes only a few hours to do, inspectors can make from $100 to over $300 per home! Now with NRI, you can, too.

Get the tools you need to set up shop fast — including a computer and home inspection software you keep

From foundations, floors, and roofs to insulation, plumbing, ventilation, and radon testing, NRI training covers every important phase of the home inspection process. NRI even gives you hands-on experience with the tools you need to get into the home inspection business fast. Architect's scale, feet-and-inches calculator, folding rule, Polaroid camera, radon test kit: They're all yours to train with, keep, and use on the job. Plus you get the one piece of equipment no successful home inspector should be without ...

Only NRI gives you a powerful computer system, complete with exclusive home inspection software! Under the guidance of your NRI instructor, you learn how to use your computer and software to create the kind of comprehensive inspection reports clients pay top dollar for.

Your FREE NRI catalog tells more

Learn how to earn extra cash in your spare time or run your own full-time inspection business! If the coupon is missing, write to NRI Schools, McGraw-Hill Continuing Education Center, 4401 Connecticut Avenue, NW, Washington, DC 20008.

SEND TODAY FOR FREE CATALOG!

NRI Schools
McGraw-Hill Continuing Education Center
4401 Connecticut Avenue, NW, Washington, DC 20008

For career courses approved under G.I. Bill, ☐ check for details

☑ Check one FREE catalog only:

- ☐ HOME INSPECTION
- ☐ Electrician
- ☐ Building Construction
- ☐ Air Conditioning, Heating & Refrigeration
- ☐ Automotive Servicing
- ☐ Small Engine Servicing
- ☐ Locksmithing
- ☐ Microcomputer Servicing
- ☐ Computer Programming
- ☐ Appliance Servicing
- ☐ Gunsmithing

Name _____ Age _____

Address _____

City _____ State _____ Zip _____

Accredited member, National Home Study Council 1348-0293

THE STORY OF ONE MAN'S PLANES
SHAPING A NATION

For half a century, Leonard Bailey—more than any other American tool inventor of the time—dominated the development of the metal woodworking plane.

Bailey's Victor tools: *A.* no. 41 spokeshave, valued at $200; *B.* no. 12 pocket plane, $500; *C.* no. 1 block plane, $160; *D.* no. 8 jointer plane, $200; *E.* no. 00 block plane, $450; *F.* bevel square, $125; *G.* rare no. 9½ rabbet plane, $3,000.

It takes more than a little experimenting to come up with a design that will stand the test of time. But in 125 years no one has found a better way to build a woodworking plane than that devised by Leonard Bailey.

Born in 1825 at Hollis, New Hampshire, Bailey gained an intimate, firsthand understanding of tools while working as a cabinetmaker. Determined to build a plane that was simpler to adjust for an accurate depth of cut, the young, inventive woodworker finally was granted the first of his many U.S. patents for plane design in 1855.

From 1855 to 1869, Bailey officially turned inventor, and experimented with several designs of bench planes. His tools from those years, built first in workshops in Winchester, Massachusetts, then in Boston, are now highly sought after by collectors. Some of these early planes featured a revolutionary—but short-lived—two-piece, or split-frame construction as a means of controlling the cutter (see the photograph *above right*).

***Top.* Rare Leonard Bailey split-frame jointer plane, circa 1857, $3,500. *Above.* Defiance brand jointer plane manufactured in Woonsocket, Rhode Island, $600.**

Woes with Stanley

Bailey's hand-plane development had reached such a stage of perfection by 1869 that he was able to enter into a contract with the newly formed Stanley Rule & Level Company of New Britain, Connecticut. Under the contract, Stanley acquired Bailey's plane patents, as well as his stock of tools and machinery from the Boston workshop. As part of the deal, Bailey agreed to work for Stanley in exchange for a percentage of each plane sold that was manufactured under his patents.

During Bailey's employment, he developed the no. 9½ block plane, which became the most prolifically produced plane of all time. Then suddenly, things began to go wrong.

It seems that a Stanley foreman by the name of Justice Traut was working on a block plane, too. Stanley decided to introduce Traut's plane, the no. 110, in 1874. To Bailey, Traut's plane interfered with the sale of planes he had designed, thus costing him money in royalties (recorded court testimony indicates that Bailey was paid about $2,000 per year in royalties by the Stanley company).

Bailey sued Stanley for breach of contract and left. A Connecticut court, however, decided in favor of the growing manufacturer, leaving Bailey to once more fend for himself. Meanwhile, the Stanley Rule & Level Company continued to produce the dozens of planes, spokeshaves, and other tools that Bailey had developed and patented.

Partners to competitors

Despite the split with Stanley, Bailey refused to be forced out of the woodworking-tool manufacturing business. Instead, he made and sold bevels and try squares of his patent from Hartford.

In 1875, Bailey also began manufacturing his now famous Victor planes, which received acclaim. A few years later, he produced a Defiance brand of planes and tools that were built in Woonsocket, Rhode Island, by the Bailey Wringing Machine Company (the company founder was no relation to Leonard Bailey).

Bailey's tools competed head to head with Stanley's until 1883. Before that time, the Stanley Rule & Level Company litigated against him on several occasions, but it was unable to force Bailey to quit.

Eventually Bailey grew tired of the fight and sold both lines to Stanley, including his stock of tools. Stanley offered both for sale in their 1884 and 1888 catalogs.

Manufacturing was in Bailey's blood, though, so he began making and selling business equipment—including one of the first copying machines—from Wethersfield, Connecticut. Leonard Bailey never did retire, but when he died in 1905, there was little financial evidence of his productive life as an inventor and businessman. To recognize Bailey's achievements, the Stanley Rule & Level Company in 1902 began casting his name into iron plane bodies, all featuring the adjustments he had developed some four decades earlier.

Written with Philip Whitby Photographs: Tim Murphy

Its Distinguishing Features Are Only Surpassed By Its Distinguished Name.

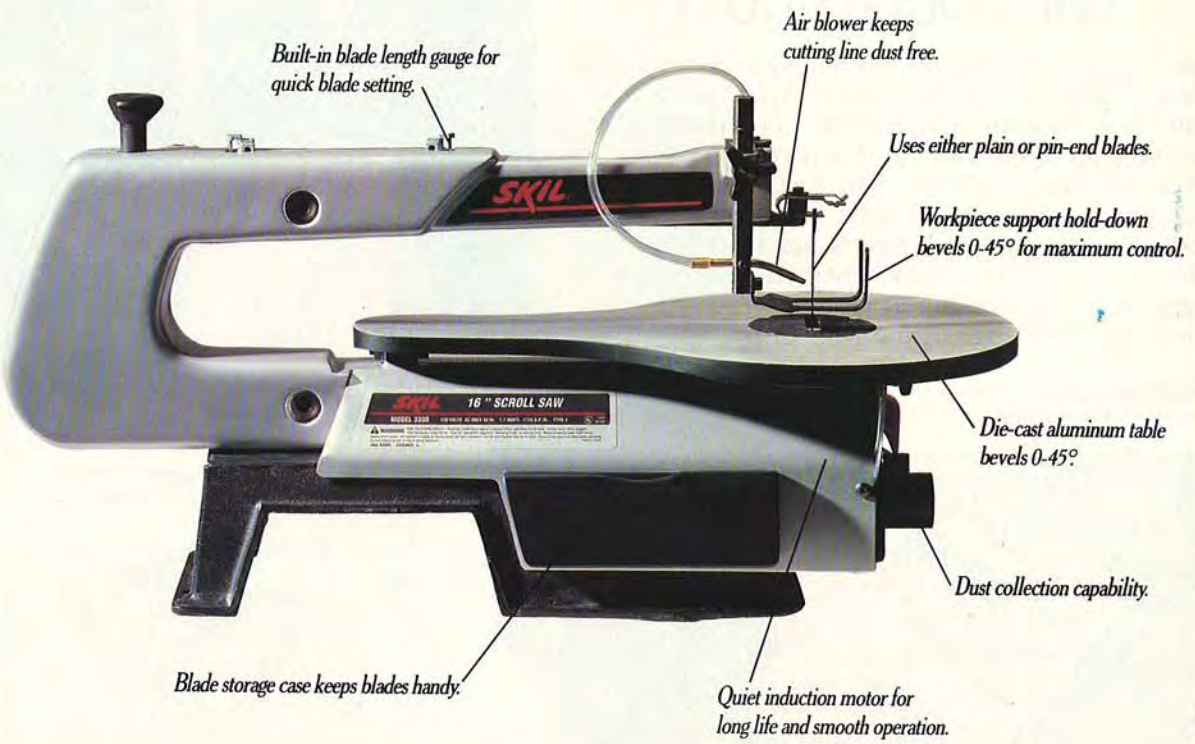
Built-in blade length gauge for quick blade setting.
Air blower keeps cutting line dust free.
Uses either plain or pin-end blades.
Workpiece support hold-down bevels 0-45° for maximum control.
Die-cast aluminum table bevels 0-45°.
Dust collection capability.
Blade storage case keeps blades handy.
Quiet induction motor for long life and smooth operation.
SKIL
16" SCROLL SAW

The advantages of the new Skil scroll saw extend beyond those fine points noted above. Also of considerable value is our reputation for creating power tools that meet the most demanding of standards.

This scroll saw and the other members of our new family of benchtop tools are the most recent examples of the Skil commitment to quality. It's a distinguishing feature, we might add, that can't be found in any other benchtop line.

SKIL®
The Benchmark In Benchtop.™

EMERSON®

Skil Corporation, Subsidiary of Emerson Electric Co., 4300 West Peterson Avenue, Chicago, IL 60646. © 1992 Skil Corp.

DRILL-PRESS DUST COLLECTOR

A DEBRIS-DEVOURING DEVICE 'DAT DOES ITS DUTY

Wood chips and sawdust don't stay around long when you hook up this clamp-down collector to your shop vacuum or dust-collection system. You'll breathe a lot easier and cut down cleanup time, too.

Use the Exploded View and Parts View drawings to construct the collector from ¼" plywood and ¾" stock. Cut or sand 10° bevels across the top and sides of the ¾"-thick back where shown *below*. To reduce sawdust buildup at table level, sand a bevel across the front edge of the bottom piece.

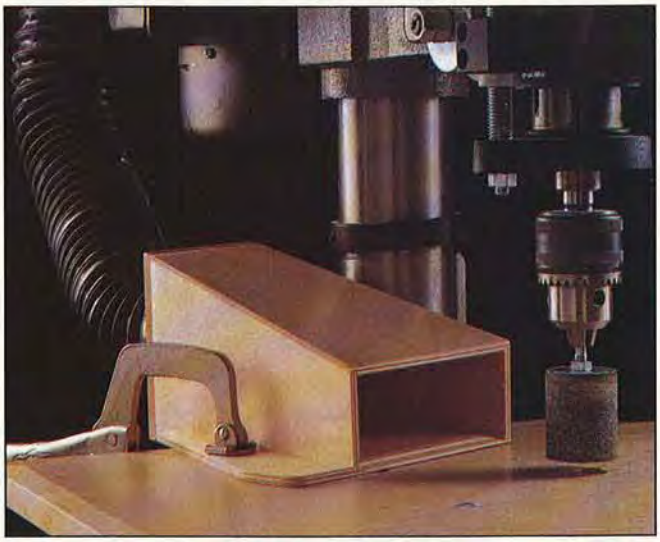

Project Design: James R. Downing
Illustrations: Kim Downing
Photograph: John Hetherington

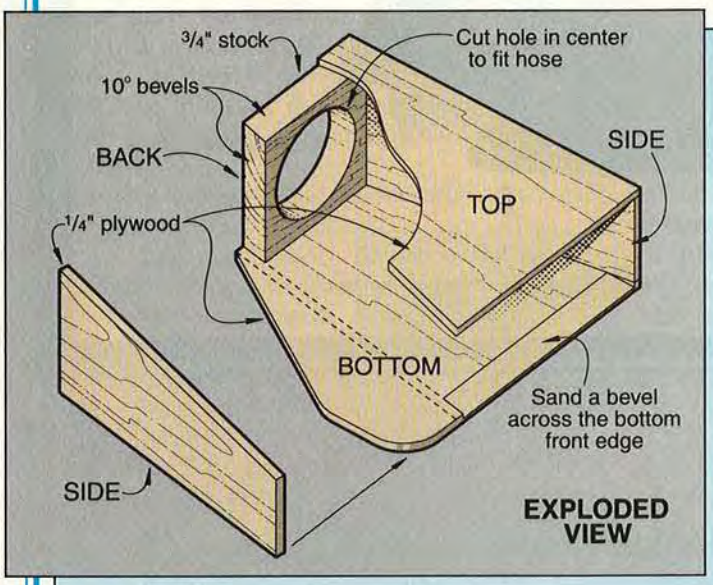

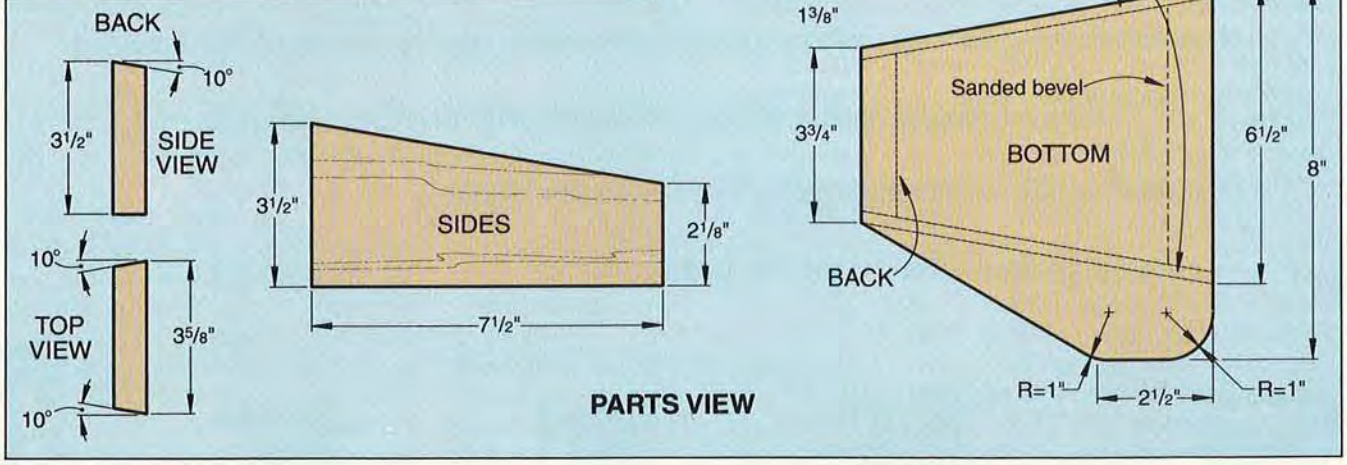

Why settle for some 2-bit power tool?

The Dremel Moto-Tool is the compact, high-speed rotary tool that's extremely versatile. With variable speeds, ranging from 5,000 to 30,000 RPMs, and over 150 specially designed bits and accessories, it allows you to complete all kinds of tasks, on all kinds of materials.

With the right bit and the right speed you can sand, carve, shape and rout wood. Change the bit, adjust the speed and use the Moto-Tool to grind, cut and deburr metal. You can even use it to shape and cut plastic or polish silver.

If we were to list all the ways you could use the Dremel Moto-Tool, this ad would go on forever. However, you can get a 95 page, detailed guide that explains bits, speeds and 175+ uses, in specially marked Moto-Tool boxes at hardware, home center and hobby stores. Or write to Dremel, Dept. W, P.O. Box 1468, Racine, WI 53406-1468, for a free copy.

DREMEL® MOTO-TOOL®
High-Speed Rotary Tool

MLCS Ltd.

MAKE BEAUTIFUL RAISED PANEL DOORS WITH YOUR . . . 1/4" or 1/2" ROUTER . . . 1/2" or 3/4" SHAPER

Professional production quality bit makes it quick and easy to produce matching rails and stiles — the panel raising bit with ball bearing guide makes the raised panel perfect every time.

SALE PRICE FOR COMPLETE SET $69.95 Regular value over $150.00!

1/4" Shank set item #554 (includes both bits shown)

SET ALSO AVAILABLE IN ½" SHANK - $79.95 - Item #852

Shaper Cutters set: Item #1059 SAVE! only **$99.95** Set: Rail & Stile & Raised Panel Cutters

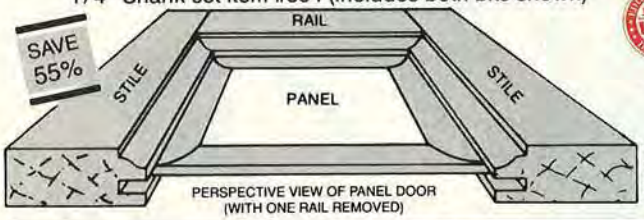

RAISED PANEL BIT SUPPLIED WITH BALL BEARING

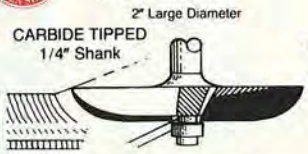

REVERSIBLE COMBINATION RAIL and STILE BIT

(For making matching rails and stiles in raised panel doors, etc.) Works with stock from 11/16" to 7/8" thick

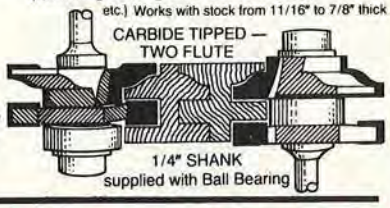

CARBIDE TIPPED ROUTER BITS • PROFESSIONAL PRODUCTION QUALITY *GUARANTEED*

WHEN ORDERING ANY THREE OR MORE *DEDUCT $1.00 EACH.* • FREE SHIPPING IN CONTINENTAL U.S.

ITEM NO.	BEST CUT BEST PRICE	DESCRIPTION	ANGLE/DEPTH/RADIUS CIRCLE DIAMETER	LARGE DIA.	CUTTING LENGTH	SHANK SIZE	PRICE
#601	Solid Carbide	1/8" Spiral Cutter		1/8"	1/2"	1/4"	$ 9.00
#603		1/4" Spiral Cutter		1/4"	3/4"	1/4"	$12.00
#903		1/4" Spiral Cutter		1/4"	3/4"	1/2" *	$12.00
#904		3/8" Spiral Cutter		3/8"	1"	1/2" *	$24.00
#905		1/2" Spiral Cutter	*Proper Adaptor Will Be Supplied	1/2"	1 1/2"	1/2"	$29.00
#530		3/16" Edge Beading	3/16" Dia. of Circle		1/2"	1/4"	$15.00
#531		5/16" Edge Beading	5/16" Dia. of Circle		1/2"	1/4"	$15.50
#350		1/8" Round Over	1/8" R	3/4"	3/8"	1/4"	$11.00
#351		3/16" Round Over	3/16" R	7/8"	1/2"	1/4"	$11.00
#230		1/4" Round Over	1/4" R	1"	1/2"	1/4"	$12.00
#353		5/16" Round Over	5/16" R	1 1/8"	1/2"	1/4"	$14.00
#209		3/8" Round Over	3/8" R	1 1/4"	5/8"	1/4"	$15.00
#355		1/2" Round Over	1/2" R	1 1/2"	3/4"	1/4"	$17.00
#655		1/2" Round Over	1/2" R	1 1/2"	3/4"	1/2"	$17.00
#656		3/4" Round Over	3/4" R	2"	7/8"	1/2"	$21.00
#199		Multiform Moulding	Unlimited Patterns	2 1/4"	2"	1/2"	$40.00
#205		1/4" Cove	1/4" R	1"	1/2"	1/4"	$12.00
#206		3/8" Cove	3/8" R	1 1/4"	9/16"	1/4"	$13.00
#207		1/2" Cove	1/2" R	1 1/2"	5/8"	1/4"	$14.00
#643		1/2" Cove	1/2" R	1 1/2"	5/8"	1/2"	$15.00
#208		3/4" Cove	3/4" R	1 7/8"	3/4"	1/2"	$26.00
#231		5/32" Roman Ogee	5/32" R	1 1/4"	15/32"	1/4"	$16.00
#232		1/4" Roman Ogee	1/4" R	1 1/2"	3/4"	1/4"	$17.00
#506		1/2" Pattern	Flush Trim	1/2"	1"	1/4"	$15.00
#508		3/4" Pattern	Flush Trim	3/4"	1"	1/4"	$17.00
#366		1/8" Slot Cutter	3/8" Deep	1 1/4"	1/8"	1/4"	$14.00
#368		1/4" Slot Cutter	3/8" Deep	1 1/4"	1/4"	1/4"	$14.00
#204		3/8" Rabbeting	3/8" Deep	1 1/4"	1/2"	1/4"	$13.00
#670		3/8" Rabbeting	3/8" Deep	1 1/4"	1/2"	1/2"	$14.00

ITEM NO.	BEST CUT BEST PRICE	DESCRIPTION	ANGLE/DEPTH/RADIUS CIRCLE DIAMETER	LARGE DIA.	CUTTING LENGTH	SHANK SIZE	PRICE
#211		3/8" Core Box	round nose	3/8"	3/8"	1/4"	$10.00
#212		1/2" Core Box	round nose	1/2"	11/32"	1/4"	$13.00
#418		3/4" Core Box	round nose	3/4"	5/8"	1/4"	$15.00
#213		1" Core Box	round nose	1"	3/4"	1/2"	$17.00
#548		Lockmitre		2"	7/8"	1/4"	$32.00
#214		1/4" Straight	plunge cutting	1/4"	3/4"	1/4"	$ 6.50
#216		3/8" Straight	plunge cutting	3/8"	1"	1/4"	$ 6.50
#474		1/2" Straight	plunge cutting	1/2"	1"	1/4"	$ 7.00
#219		3/4" Straight	plunge cutting	3/4"	1"	1/4"	$ 9.50
#779		3/4" Straight	plunge cutting	3/4"	1 1/2"	1/2"	$10.00
#462		1/2" Bull Nose	1/2" Dia. of Circle		3/4"	1/4"	$16.00
#464		3/4" Bull Nose	3/4" Dia. of Circle		1"	1/4"	$21.00
#764		3/4" Bull Nose	3/4" Dia. of Circle		1"	1/2"	$21.00
#545		Tongue & Groove	Straight	15/8"	1"	1/4"	$29.00
#845		Tongue & Groove	Straight	15/8"	1"	1/2"	$29.00
#546		Tongue & Groove	Wedge	1 3/16"	1"	1/4"	$29.00
#846		Tongue & Groove	Wedge	15/8"	1"	1/2"	$29.00
#450		1/8" Beading	1/8" R	3/4"	3/8"	1/4"	$11.00
#233		1/4" Beading	1/4" R	1"	1/2"	1/4"	$13.00
#454		3/8" Beading	3/8" R	1 1/4"	5/8"	1/4"	$15.50
#455		1/2" Beading	1/2" R	1 1/2"	3/4"	1/4"	$17.00
#500		3/8" Flush Trimming		3/8"	1/2"	1/4"	$ 7.00
#501		3/8" Flush Trimming		3/8"	1"	1/4"	$ 7.50
#503		1/2" Flush Trimming		1/2"	1"	1/4"	$ 8.50
#221		1/2" Flush Trimming		1/2"	1 3/16"	1/2"	$ 8.00
#558		Thumbnail		1 3/16"	3/8"	1/4"	$18.50
#858		Thumbnail		2 1/2"	3/4"	1/2"	$35.00
#579		Molding Plane		1 1/8"	1 3/4"	1/4"	$31.95
#879		Molding Plane		1 1/8"	1 3/4"	1/2"	$31.95

New 32-page catalogue featuring 100's of high-quality router bits, plus other professional woodworking products.

Featured in WOOD® magazine Idea Shop

CONTROL THE SPEED OF YOUR ROUTER

ROUT AT THE SPEED THAT GIVES THE BEST RESULTS WITH THE WOOD AND BIT YOU ARE USING!

FEATURES:

- Speed Adjustable from Full Speed to 0 RPM
- Full Horsepower and Torque at All Speeds
- Go Back and Forth from Any Pre-Set Speed to Full Speed at the Flip of a Switch
- Works with All Routers 3¼ HP or Less
- 120V 15 Amp
- Gives Your Router a Feature Only Available on Routers Costing Hundreds of Dollars!

EASY TO USE - Simply plug in Speed Control and plug your router into the Speed Control - turn dial for best results. (Speed Control has a clip that can be worn on your belt or hung on wall or left loose.)

- Reduces speed electronically without reducing torque; electronic feed-back maintains speed by increasing voltage to motor as load increases.

While in the Phila. Area Visit Our Fully Stocked Showroom (Call for easy directions — 8:30-5:00, M-F)

SALE $29.95 Order Item #197

To order by Master Charge, Visa, or Discover Call Toll Free, 7 Day - 24 Hour Order Service, 1-800-533-9298 or send check to: **MLCS Ltd., P.O. Box 4053D P, Rydal, PA 19046**

©1991

FROM CHICAGO'S SOUTH SIDE DA' SCROLLERS!

When readers Roy King and Scott Kochendorfer (above) called us a year ago to ask if we'd like to see some of their 3-D scrollwork, we said "Why not?" The two had just teamed up in a mail-order pattern business called "Scroller." When their projects arrived, we got so excited that we featured their Old-World Windmill in the October 1992 issue. Then we traveled to Chicago's South Side suburb of Oak Lawn to find out how they came up with their eye-popping designs, and if sawing them was as easy as they said.

Print this article

It's easy to spot first-time viewers of a Scroller wall plaque—dropped jaws, eyes wide with amazement. "People love the work," says Scott Kochendorfer, "but they think it's so darn difficult, when it's really easy."

To see what Scott's talking about, check out the Cozy Fireplace Plaque on *page 28.* Thin wood, delicate silhouettes, and those signature fine-cut detail lines. This is easy?

Roy insists that "the hardest part of making our designs is convincing someone they can do it." At crafts shows, right-handed Roy makes his point by cutting intricate pieces using just his left hand.

Far from trying to show off, he and Scott take every chance to play down their woodworking skills and business accomplishments. "We're just hard-working good old boys—two common Joes, mutts, whatever you want to call us," says Roy. We'll add lifelong friends to the list.

Graphic designers Carol Hayda, *left,* and Nancy Burgan help develop most of Scroller's original plaque designs. Besides designs, Scroller sells the materials and supplies needed to make their patterns, including wood and blades.

Worm farmers from way back

Buddies since first grade, Roy and Scott now live in south-side suburbs only 20 minutes apart. "Our lives have seemed to parallel each other," says Scott. Roy nods enthusiastically, "We always thought alike and believed in the same concepts in life." They even laugh at the same things, especially

Continued

DA' SCROLLERS!

their ill-fated trio of pre-Scroller business attempts.

"This is my and Roy's fourth business together," Scott explains, chuckling. "The first three—obviously—were failures. But not in the sense of learning. You have to take your losses and learn from them. We did that—every time!"

Their first enterprise, a part-time auto repair shop, just never got into high gear during the sixties. Then came the ecologically minded seventies when the two took up worm farming in their garages. But a sudden cold snap killed off their "crop." Most recently, a mail-order T-shirt business they put together commemorating U.S. efforts in the Persian Gulf crashed on takeoff. The war ended just as their shirts were ready to ship.

Scroller started out as Roy's brainstorm when he realized he'd run dry of interesting patterns to scrollsaw. According to him, everything out there was either time-consuming fretwork or an "endless parade of country—cows and pigs."

Scrolling for fun and profit

That's when Roy's imagination took over and he started experimenting, eventually working down to thin, ⅛"-thick Baltic birch plywood. He started by designing and scrolling simple silhouettes. From there, he discovered that by adding a little veining and some detail lines, he could make those silhouettes come alive. Pretty soon, Roy was layering the individual silhouettes into three-dimensional scenes, and the rest, as they say, is history.

Scott admits to being a little skittish when Roy approached him with the idea of a scrollsaw pattern business. "Back then, I couldn't even cut a 2x4 straight. But I fell in love with the scrollsaw. I'm a perfect example of how anybody can do this work if they spend a little time with it."

Roy couldn't agree more. "It just takes practice, concentration, and a little patience," he says.

Well and good, but success also comes with the help of a tiny #2/0 blade. Scott realized that using that blade is one of the craft's best-kept secrets, and a big part of why Scroller designs are really so easy when they look so hard. "You can spin that blade; you can make 90° and 45° cuts; you can get away with murder," Scott says convincingly. (For more of Scroller's inside tips, see the box *far right*).

Only the necessities

You won't see lots of big stationary power tools in Roy's basement (a.k.a the Scroller shop). In fact, the Delta and RBI scrollsaws the partners use are just about it.

Roy says bluntly, "Anything we're gonna design, if we can't cut it on only a scrollsaw, it won't work as a pattern."

His passion for the saw comes through loud and clear. "I mean, this is the only tool—you could put it in your bathroom if you had to—that you'll ever need. We're talkin' *real* scrollsawing here. No drills. No hammers. No nails. No nothin'."

And what Roy says describes Scroller to the T: nifty patterns that let an ordinary Joe (or Jane) turn out a truly artistic project with minimal materials and a single tool, all in the space of an evening. "The market we're trying to develop we'll call 'Scrollsawing for Fun.' Get the wife and the kids involved. Just have a good time," Scott remarks. He should know.

Here, the cutting platform with the tiny ⅛" zero-clearance blade hole gives near-blade support to delicate silhouette details. Roy cut away some of the waste area to expose the blade hole.

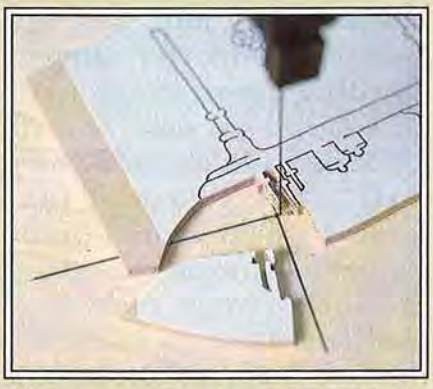

The less pressure put on the wood, the more control you'll have. Roy relaxes his chest and arm muscles and guides the wood with fingertip pressure. "Transfer all your energy and thoughts to your fingertips," he says.

His twelve-year-old son now punches out their patterns, too.

Roy sums up their philosophy. "We like to think of our work as painting a picture with a scrollsaw blade. Our patterns bring out hidden artistic talents!"

The way to run a business

When it comes to customer service, Roy and Scott are two guys

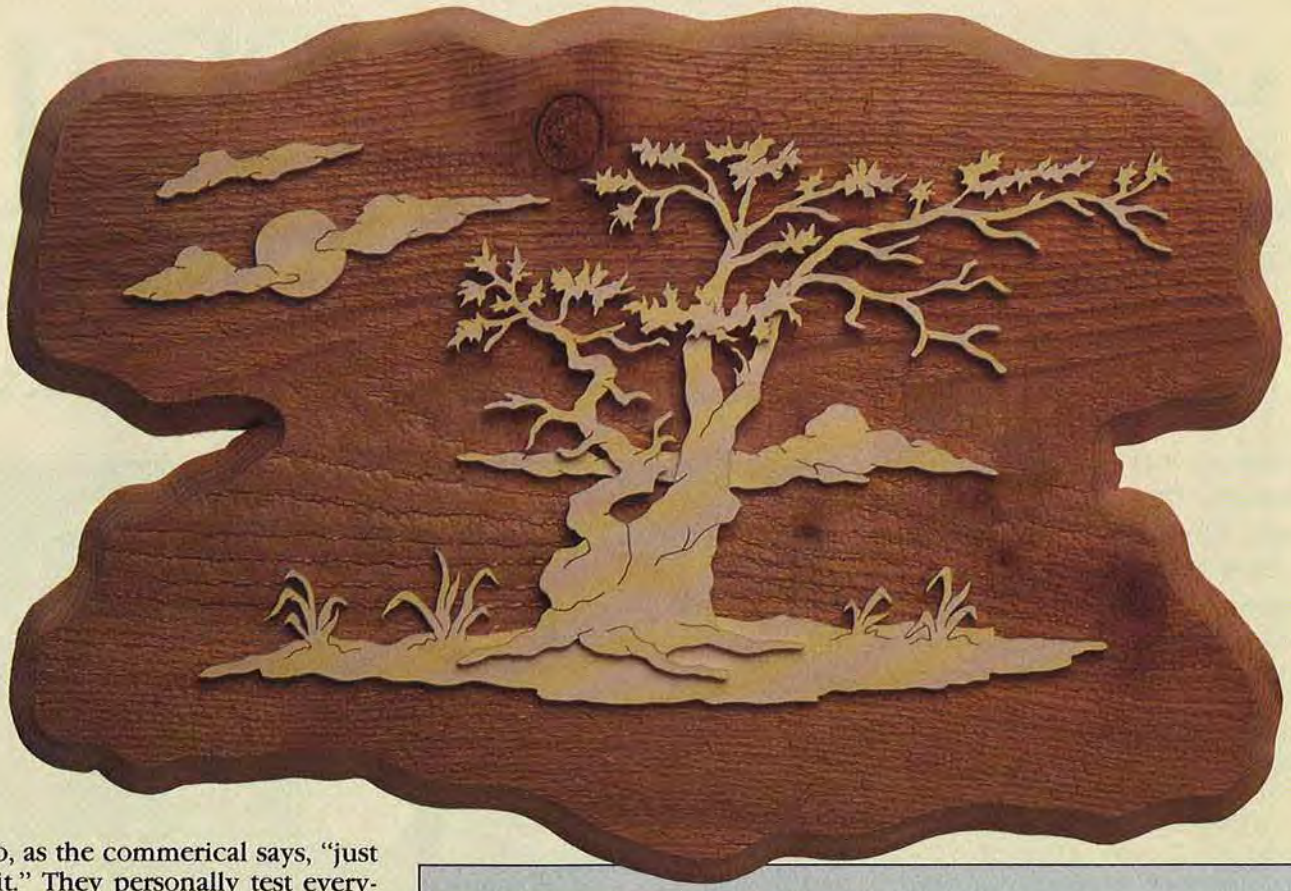

who, as the commerical says, "just do it." They personally test everything they sell. And their patterns come with a 10-day, no-quibble, money-back guarantee. "We tell anybody who calls [with a complaint] that we'll cut 'em a refund check that day. They can just keep the pattern," Roy flatly states. No surprise—they've never had to write a refund check.

And, unlike some of the big guys, they have an 800 number for ordering and getting help with patterns. But Roy confesses, he likes it when folks just call to talk scrollsawing, too.

"Answering the needs of the people, that's where we want to be. Our job is to help by sharing what we've learned." Scott agrees: "We're trying to do business the old-fashioned way...which we think is the *only* way."

It looks like the fourth time is the charm for Roy and Scott. Today, Scroller's second mail-order catalog (see *page 29*) brims with more than 100 original 3-D wall-plaque patterns. And in Oak Lawn, da' Scrollers are always busy punching out more!

Written by Dave Kirchner, Instant Comma Creative Services. Photographs: Frank Cozza, John Hetherington

ROY AND SCOTT'S TIPS FOR "REAL" SCROLLSAWING

- *Use the right tools.* That means a variable-speed scrollsaw, #2/0 and #7 blades, fluorescent lighting, and ideally, a magnifier.
- *Skip transferring patterns.* Instead, use spray adhesive (from art-supply stores) to stick them right on the plywood. After cutting, just peel it off and throw it away. Look ma, no residue!
- *Use a cutting platform on your saw.* Cut a circle out of smooth-one-side wood to fit your saw's table, center a ⅛" hole for the #2/0 blade, and stick it down with double-faced tape. With the "zero-clearance" blade hole, the platform supports thin silhouettes right next to the blade. The larger hole it covers would let the downward pull of the blade break them off.
- *Apply only fingertip pressure.* Relax! You only need fingertip pressure to guide thin Baltic birch. Soon, you'll be able to use your fingertips as pivot points to maneuver through intricate cuts.
- *Leave waste areas intact until you finish cutting.* This gives you greater hand area for controlling the wood, and also helps protect extra-fine silhouettes (such as the three candlesticks you see on the mantel in the Cozy Fireplace Plaque on *page 28*).
- *Finally, have fun at the blade!* Practice cutting out Baltic birch for an hour or so. And don't worry if you botch a few details. Scroller's designs are forgiving, and no one will ever notice.

COZY FIREPLACE PLAQUE

USE IT TO WARM UP A COLD BARE WALL

Here's a 3-D wall plaque from Scroller designers Roy King and Scott Kochendorfer that offers three levels of scrollsawing fun. No need for inside cuts, and you can do it all with a #2/0 blade.

You'll need *a ⅛×8×10" piece of Baltic-birch plywood (available at hobby shops or by mail from Scroller, see the Buying Guide), and a 12"-long piece of 1×12" rough-sawn western red cedar. Roy and Scott recommend that you cut the pattern pieces and detail lines with a #2/0 scrollsaw blade (.022×.010" with 28 teeth per inch), and the plaque's 30-degree bevel with a #7 blade (.043×.016", 12 teeth per inch).*

Photocopy the patterns, *opposite page*, and adhere them to the plywood with spray adhesive. Cut out the parts in this order: the rug (A), fireplace (B), dog (C), fireplace logs (D), mantel (E), chair (F), and spacers (G, H, I).

For each piece, begin cutting at the point marked by the arrow on each pattern, *opposite*. Then, continue in a clockwise direction, cutting out the silhouette and all detail lines as you come to them.

While going around each piece, don't be tempted to cut off the waste areas. Leave them intact until you've finished cutting. The waste helps protect delicate design areas, such as the candles on the mantel. By providing more wood to hang onto, it also gives you better control guiding the piece into the blade.

A couple of hints: For the fireplace (B), cut all of the brick detail work first, working in a *counterclockwise* direction from the entry point. Then go around the silhouette, cutting clockwise.

For the chair (F), start cutting where shown and continue upward, cutting all of the detail lines on the left side of the chair. Back out the blade, and continue to the basket. Cut the rest of the detail lines as you proceed clockwise around the silhouette.

Change to a #7 scrollsaw blade. Tilt the saw table to 30°, and saw the 1×12" plaque, maintaining a 7 ½×9" area in the center. With the rough side up, keep the plaque on the high side of the table as you saw. Install a wall hanger on the back.

Now, stack up the scene

After peeling off the patterns, glue the fireplace (B) where indicated on the Plaque Layout drawing. Add the mantel (C) on top of the fireplace. Glue the spacer (G) to the back side of the fireplace logs where shown, and glue the assembly inside the hearth.

Glue the rug (A) to the plaque where shown, and then glue the dog (C) on top of the rug.

Glue two spacers (H, I), stacked one on top of the other, to the back side of the chair, where shown. Then glue the assembly to the plaque where indicated.

Roy and Scott do not use even a clear finish on their projects, preferring the natural color of the birch and cedar. But for protection, you can seal your work with a clear spray finish, applying it from several angles. Be sure to cover the edges of the thin plywood. Spray the pattern parts before gluing if you want to leave the cedar natural.

Print this article

Buying Guide

More patterns and supplies. A catalog of 100-plus designs, Baltic-birch plywood, rough-sawn cedar, spray adhesive, #2/0 and #7 scrollsaw blades, glue, and even picture hangers available from Scroller, 9033 S. Nashville, Oak Lawn, IL 60453. Include $2.00 (U.S.) for postage and handling.

Project Design: Scroller, Roy King and Scott Kochendorfer
Drawing: Mike Henry
Photograph: John Hetherington

ECHOES OF ANTIQUITY

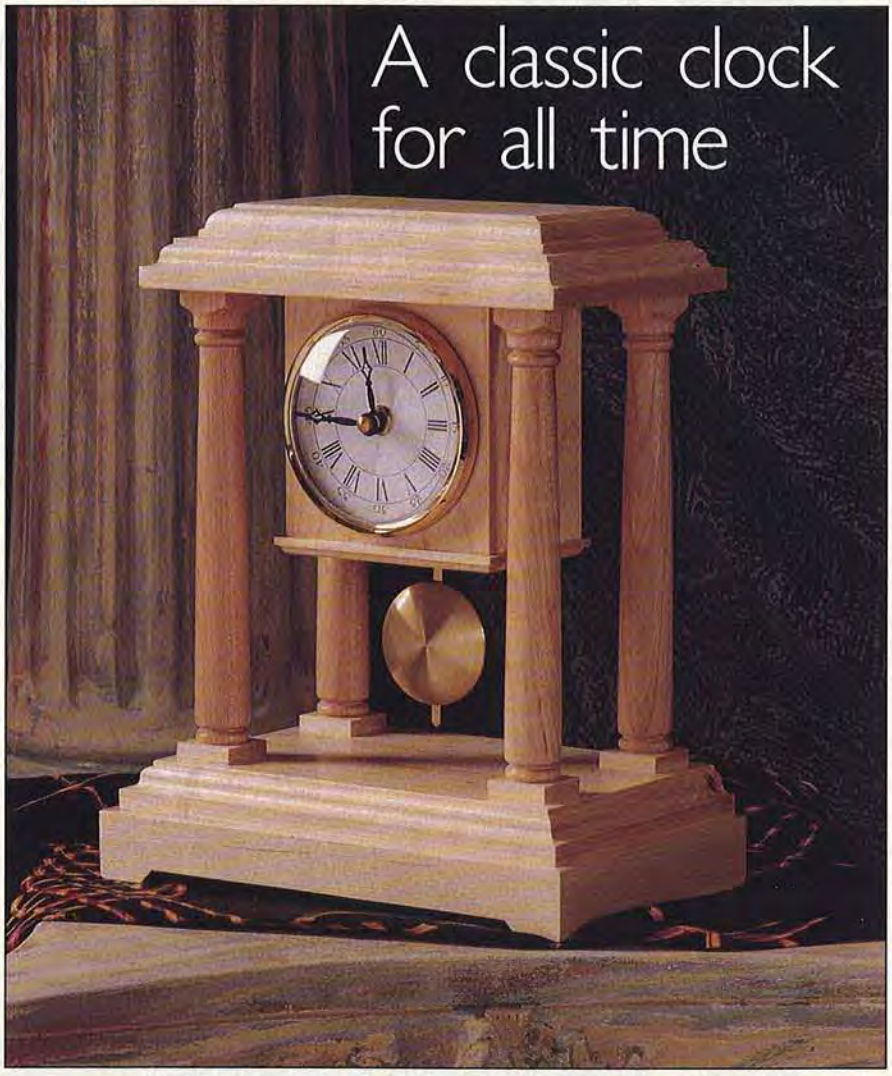

Do ordinary clocks leave you uninspired? Then how about giving this columned beauty a try? Imitating the lines of Greek and Roman architecture, our elevated timepiece offers plenty of room underneath for the swinging pendulum. Use our instructions to turn your own columns, or purchase preturned ones through our Buying Guide.

Print this article

Note: *You'll need some thin stock for this project. You can either resaw or plane thicker stock to the thicknesses listed in the Bill of Materials. For our source of the clock movement, hands, dial, and turned columns, see the Buying Guide at the end of the article.*

Start with the clock movement enclosure

1 Cut a piece of ½"-thick maple to 4" wide by 14" long. Tilt your tablesaw blade 45° from vertical, and bevel-rip one edge of the 14"-long piece. Reposition the tablesaw fence, and rip the opposite edge at 45° for a 3¾" finished width.

2 From the 14"-long strip, crosscut a piece to 3⅞" long for the front (A). See the Movement Enclosure drawing for reference. Mark the centerpoint, and drill a 5/16" shaft hole in the front piece.

3 With a beveled edge against the fence, reset the blade to 90°, and rip the opposite edge of the remaining 10" strip to 2½" wide.

4 Cut a ⅛" rabbet ⅜" deep along the square-cut edge of the 10" piece, and then crosscut the two side pieces (B) to length.

5 Cut a 2¾×3½" spacer block from ¾" stock. As shown in the photo *at right*, glue and clamp the front piece (A) to the sides (B). Use masking tape to align the mitered joints and the spacer block to keep the pieces square.

6 From ⅛"-thick stock (we planed thicker stock to size), cut the enclosure back (C) to fit the rabbeted opening. For mounting the back to the enclosure later, drill four 3/32" shank holes where

Secure the mitered joints together with masking tape when gluing the pieces. The spacer holds the pieces square.

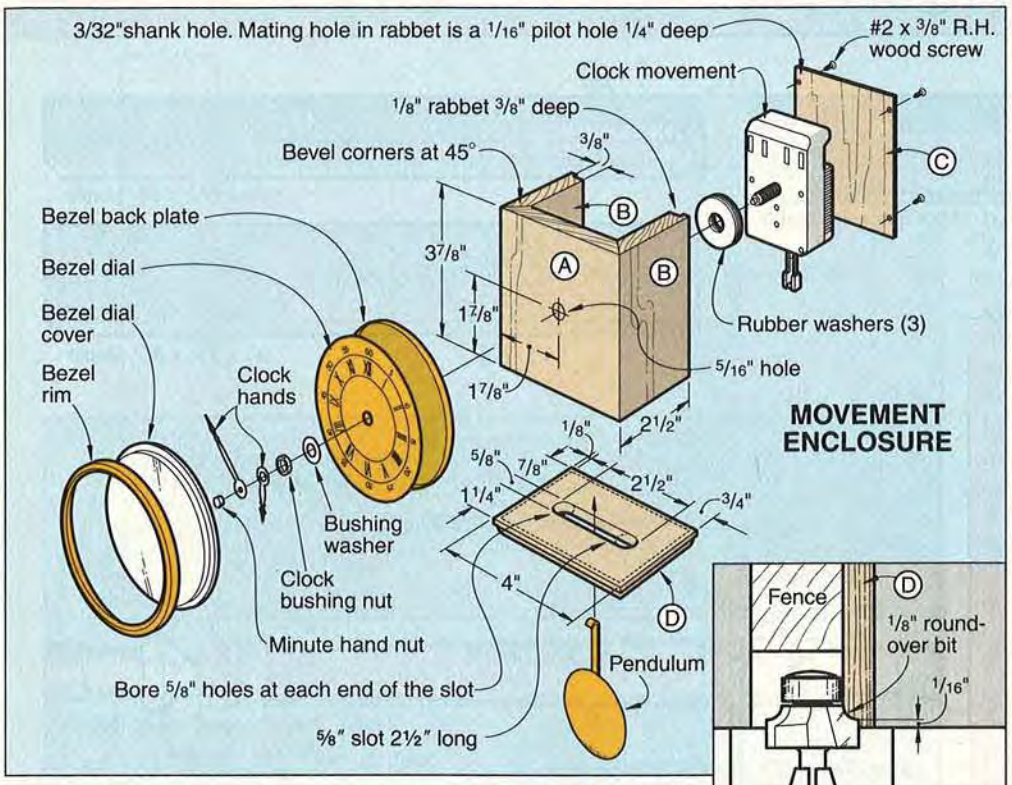

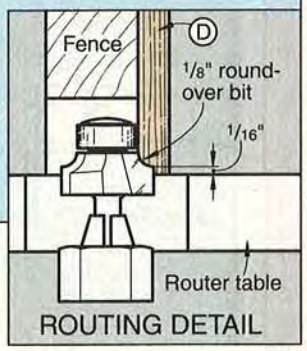

Bill of Materials

Part	Finished Size T	W	L	Matl.	Qty.
ENCLOSURE					
A* front	½"	3¾"	3⅞"	M	1
B* sides	½"	2½"	3⅞"	M	2
C back	⅛"	3½"	3⅞"	M	1
D bottom	¼"	2¾"	4"	M	1
COLUMNS					
E* columns	1"	1"	7¼"	M	4
F* bases	¼"	1"	1"	M	4
BASE					
G top	¾"	5"	8"	M	1
H front	¾"	1"	8½"	M	1
I sides	¾"	1"	5¼"	M	2
TOP					
J top	¾"	4¾"	7½"	M	1
K cap	½"	3½"	6¼"	M	1

*Initially cut parts marked with an * oversized. Then, trim each to finished size according to the how-to instructions.

Material Key: M–maple

Supplies: #17×1¼" brads, #2×⅜" round-head wood screws, #6×1¼" flathead wood screws, clear finish.

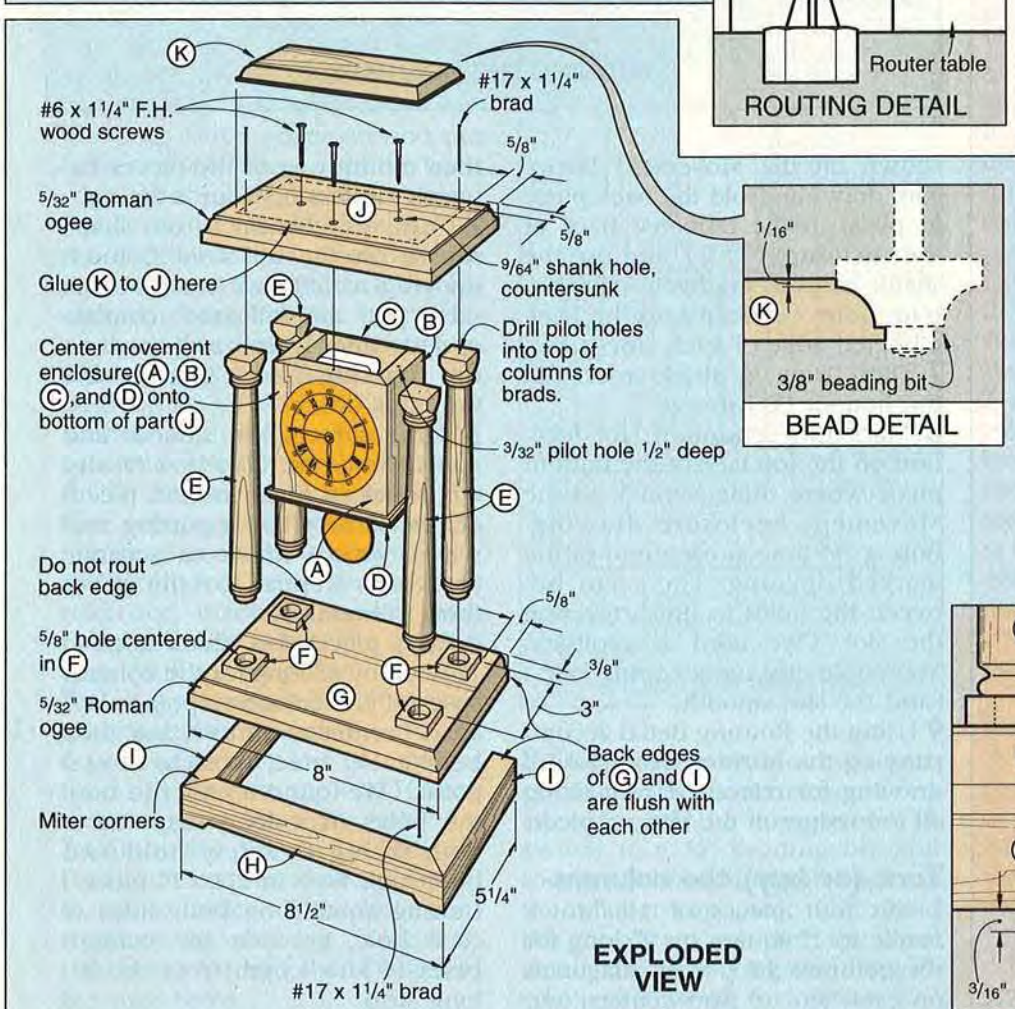

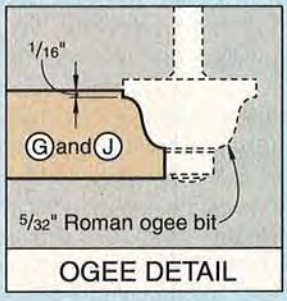

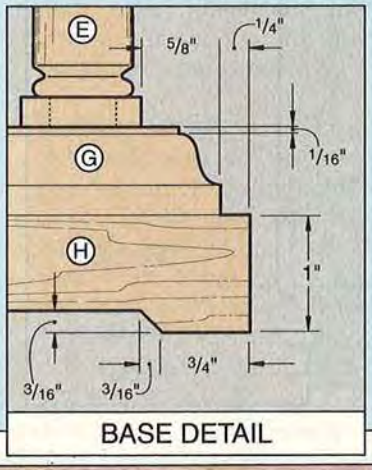

CUTTING DIAGRAM

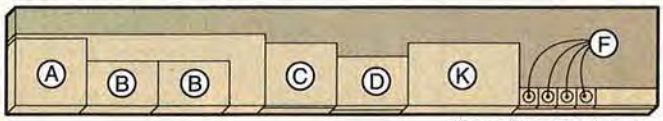

1/2 x 5 1/2 x 36" Maple

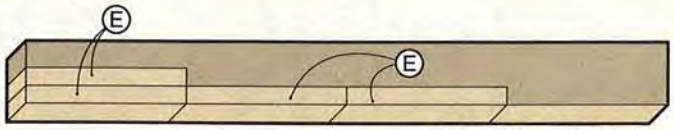

1 1/16 x 3 1/2 x 36" Maple

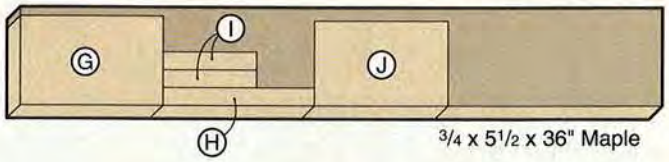

3/4 x 5 1/2 x 36" Maple

COLUMN
(FULL-SIZED PATTERN)

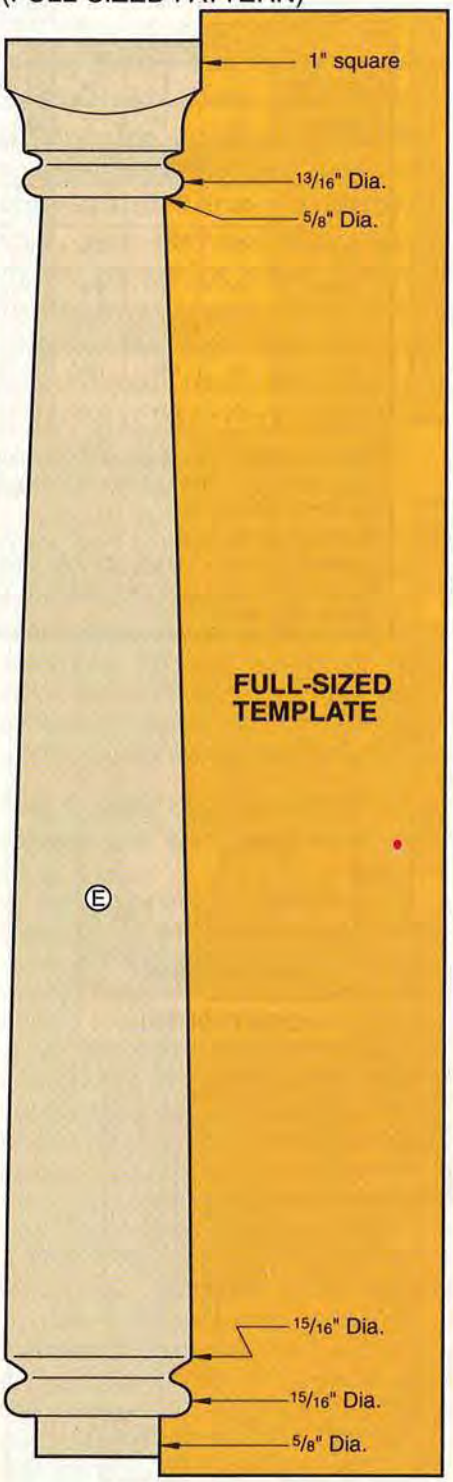

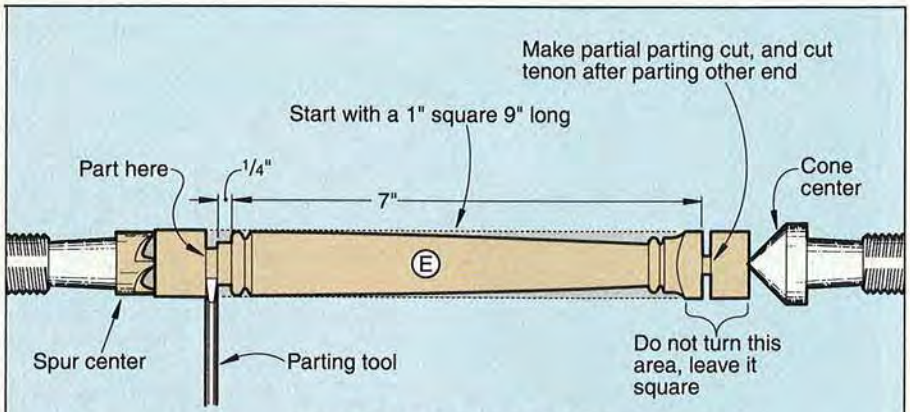

TURNING THE COLUMNS

shown on the Movement Enclosure drawing. Hold the back piece in place in the rabbeted back of the enclosure (A, B), and use the shank holes as guides to drill 1/16" pilot holes 1/4" deep into the back rabbeted edge of each side piece.

7 Then, from 1/4"-thick stock, cut the bottom (D) to size.

8 Mark the pendulum slot location on the top face of the bottom piece where dimensioned on the Movement Enclosure drawing. Bore a 5/8" hole at each end of the marked opening. Then, cut between the holes to finish forming the slot. (We used a scrollsaw. You could also use a coping saw.) Sand the slot smooth.

9 Using the Routing detail accompanying the Movement Enclosure drawing for reference, rout along all four edges of the bottom piece.

Turn (or buy) the columns

1 Cut four pieces of 1 1/16"-thick maple to 1" square by 9" long for the columns (E). Mark diagonals on each end to find centers, and then mount one of the pieces between centers on your lathe.

2 Turn the column to the shape shown on the full-sized Column drawing *at left* (we used a small skew and the full-sized template *at left*) and where indicated on the drawing titled Turning the Columns *above*.

3 Sand the column smooth and apply the finish. (For best results, we prefer to finish turned pieces on the lathe.) Use a parting tool where shown *above* to separate the ends. Repeat for the other three columns.

4 Cut a piece of 1/4"-thick stock to 1" wide by 8" long for the column bases (F). Mark centerpoints 1 1/2" apart (center-to-center), and then bore a 5/8" hole at each centerpoint. (We found it easier to bore the holes in a long strip rather than trying to safely hold and bore each hole in a 1×1" piece.) Cutting equally on both sides of each hole, crosscut the column bases (F) to length from the 8"-long strip.

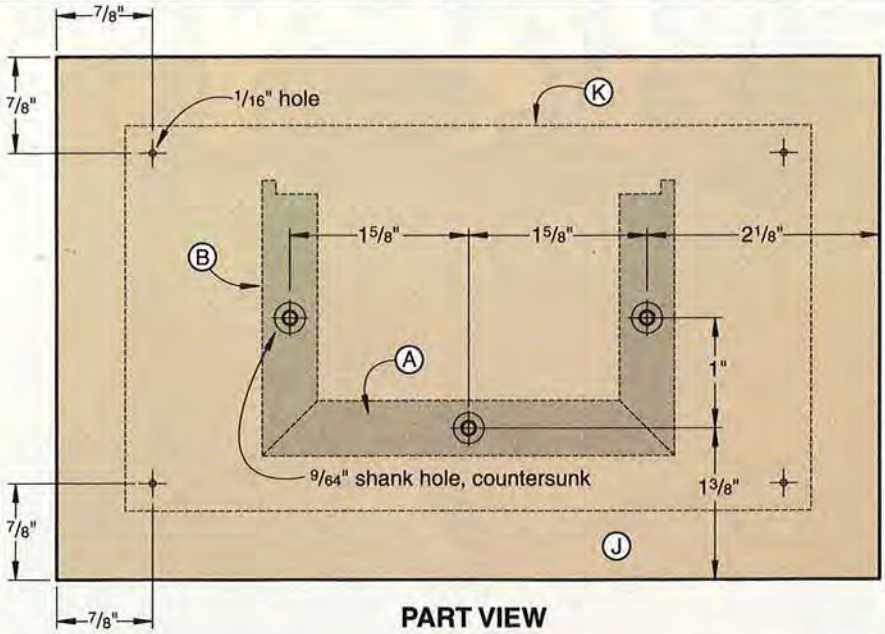

PART VIEW

Add the base and top

1 Cut the base top (G) to size.

2 Mount a 5/32" Roman ogee bit into your table-mounted router. As shown in the Ogee detail accompanying the Exploded View drawing, rout an ogee around the front and side edges (not the back edge) of the base top (G).

3 Referring to the dimensions on the Exploded View drawing, use a square and lightly mark the locations of the column bases (F) on the top surface of the base top. Glue the column bases onto the base top (G). Now, drill a 1/16" pilot hole centered in each column base and through the base top.

4 Cut the base front piece (H) to size, miter-cutting both ends. Using the Base detail accompanying the Exploded View drawing for reference, mark the outline and cut the notch across the bottom edge of the front piece.

5 Cut the base sides (I) to size, miter-cutting the ends.

6 Glue and clamp the base pieces (H, I) to the base top (G). Check that the miter joints are tight.

7 Cut the top pieces (J, K) to size. Using the Part View *above* for dimensions, mark all the hole centerpoints on the top piece (J). Drill the pilot and shank holes to the sizes listed.

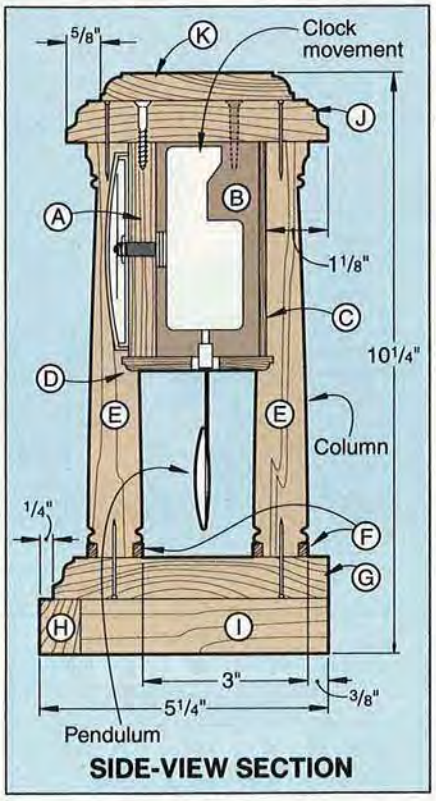

SIDE-VIEW SECTION

8 Using your table-mounted router, rout a 5/32" Roman ogee along all edges of the top piece (J). Switch to a 3/8" beading bit, and rout a 3/8" bead along all edges of the smaller cap piece (K). Sand the pieces smooth. See the Bead detail accompanying the Exploded View drawing for reference.

Assemble the parts, and add the movement

1 Sand the movement enclosure, base, and top pieces smooth.

2 Center and lightly clamp the movement enclosure (A, B) to the bottom surface of part J, centering the pieces over the drilled screw holes. Using the previously drilled holes in J as guides, drill pilot holes into the top edges of the movement enclosure. Screw the enclosure to the bottom of part J.

3 For securing the column tops to part J, position the columns between the base and top, and center the column tops under the 1/16" holes in J. Glue and nail the columns between the base top (G) and top piece (J).

4 Center, and then glue the cap piece (K) to the top of part J where shown on the Exploded View drawing.

5 Finish-sand the assembly, and add a clear finish.

6 Adhere the bezel dial to the front face of the bezel back plate. Add a dab of silicone sealant to the back surface of the bezel back plate. Stick the back plate to the front surface of the enclosure front (A), with the 12 o'clock position directly at the top and the shaft holes aligned.

7 Position the rubber spacers between the movement and back face of the front piece (A). Use the spacers to center the pendulum in the slot and prevent the minute hand from rubbing against the back face of the bezel dial cover. Install the movement where shown on the Movement Enclosure drawing.

Buying Guide

- **Clock and columns.** Quartz pendulum clock movement with bezel, hands, and dial. Kit #4C-P, $19.95 ppd. Add $10 ($29.95 total) for four 7¼"-long maple columns. Schlabaugh & Sons, 720 14th Street, Kalona, IA 52247 or call 1/800-346-9663 or 319/656-2374 to order.

Produced by Marlen Kemmet Project Design: Schlabaugh & Sons, Kalona, Iowa Photographs: Wm. Hopkins Illustrations: Kim Downing

A WOOD MAGAZINE F·A·M·I·L·Y HEIRLOOM PROJECT

BABY'S

Print this article

Few events can match the excitement surrounding the birth of a child or grandchild. And you can add to the exhilaration by presenting baby's parents with this stylish, sturdy, hardwood crib. It features adjustable sides, a teething rail, and a reliable means for raising or lowering the side panel and mattress. And with our step-by-step instructions and hardware Buying Guide, you'll beat the stork if you start building right away.

***Note:** You'll need 1½"-thick stock for the corner posts. You can buy stock of this thickness, plane thicker stock, laminate thinner stock, or see the Buying Guide for a lumber kit for the entire project.*

Okay, let's start with the four corner posts

1 Unless you're working with 1½"-thick stock, start by laminating thinner stock to form the 1½"-thick posts. To do this, cut eight pieces of ¾"-thick stock to 1¾" wide by 46" long. Then, glue and clamp the pieces face-to-face, with the edges and ends flush. After the glue dries, scrape the excess from one edge, plane that edge smooth, and then rip the opposite edge for a 1½" finished width. Finally, crosscut the 1½"-square posts to length.

2 Cut a ⅛" taper across all four edges of the top end of each post where shown in the Taper detail. (As shown in the photo on *page 36*, we screwed a long auxiliary wooden fence to our miter gauge, and angled the blade 10° from vertical. Then, we clamped a

Continued

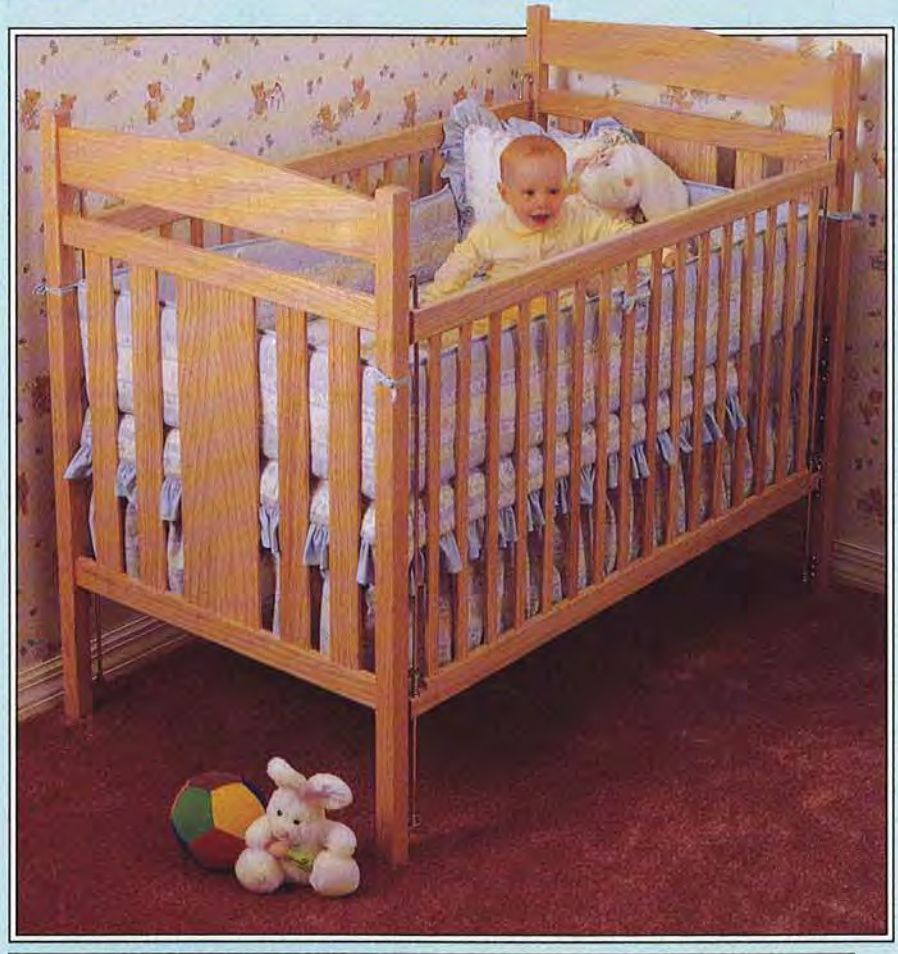

Bill of Materials

Parts	Finished Size T	W	L	Matl.	Qty.
CORNER POSTS					
A* posts	1½"	1½"	44¼"	LA	4
END PANELS					
B top rails	¾"	4⅞"	28¼"	A	2
C rails mdl&btm	¾"	2"	28¼"	A	4
D center slats	⅜"	7"	23¾"	A	2
E outer slats	⅜"	2½"	23¾"	A	8
F* spacers	⅜"	½"	2"	A	76
G* spacers	⅜"	½"	1⅝"	A	8

Parts	Finished Size T	W	L	Matl.	Qty.
SIDE PANELS					
H* rails top & btm	¾"	2"	49⅞"	A	4
I slats	⅜"	1"	23¾"	A	32
J* spacers	⅜"	½"	1⅛"	A	4
K* spacers	⅜"	½"	7/16"	A	8

*Initially cut parts marked with an * oversized. Then, trim each to finished size according to the how-to instructions.

Material Key: LA-laminated ash, A-ash

Supplies: ⅜" dowel pins 2" long, 27½×52½" crib mattress, clear finish.

FIRST BED

Crib safety alert! See June 1993 issue (no. 61) pg. 8 for an important safety update. Click here to view.

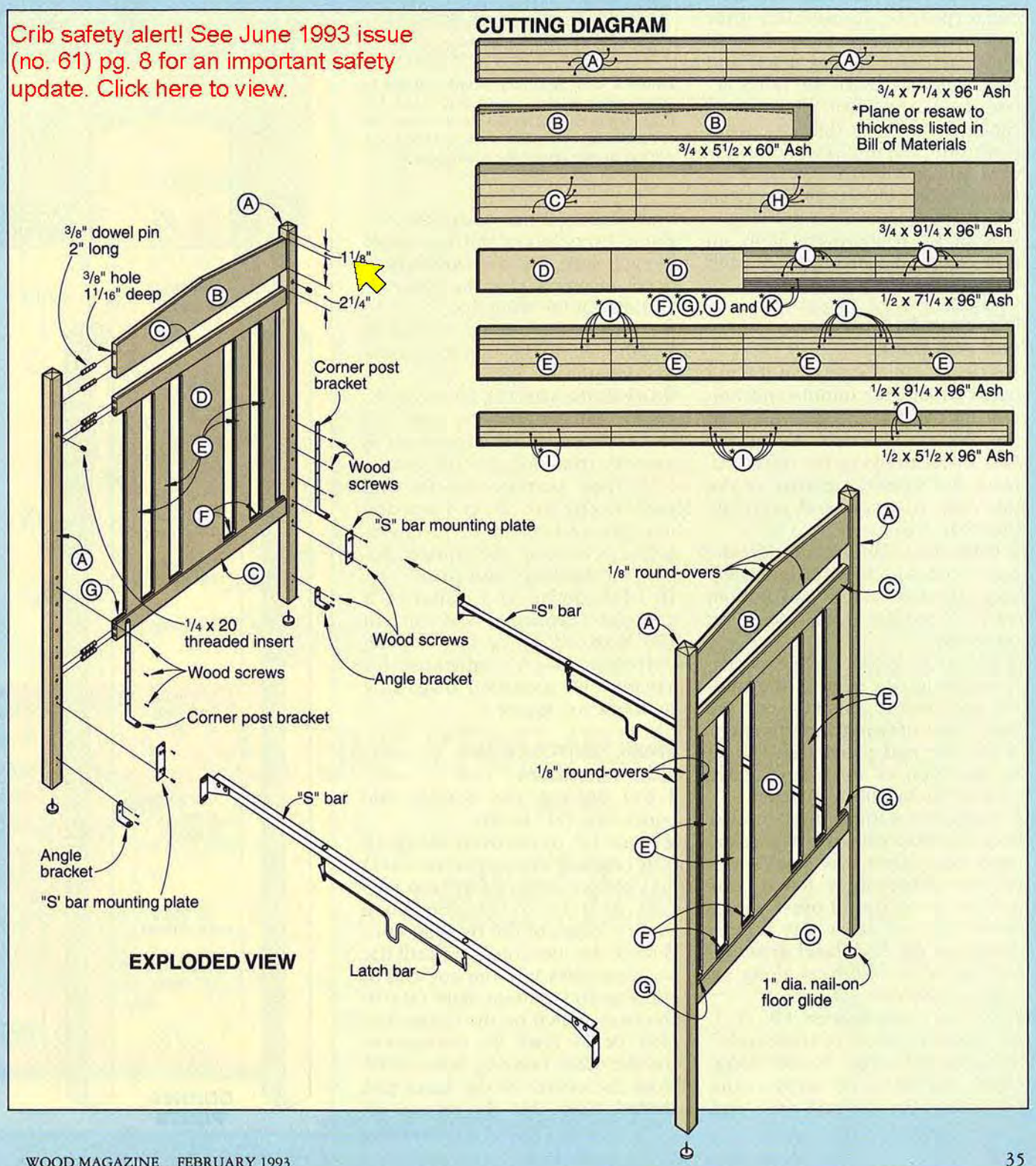

small handscrew clamp to the fence to act as a stop, and made four cuts across the top end of each corner post.) Using a block and sandpaper, sand the mitered ends smooth.

3 Using the Corner Posts drawing for reference, mark all the hole centerpoints. Remember that you're making two pairs of posts, with each pair having a left and right member. Mark the holes accordingly, and label the posts in each pair left or right to avoid confusion. See the Exploded View drawing for further reference. Drill all the holes to the sizes stated on the Corner Post drawing.

4 Rout ⅛" round-overs along all four edges (not the ends) of each corner post.

It's time to build the end panels

1 From ¾"-thick stock, cut the top rails (B) and the middle and bottom rails (C) to the sizes listed in the Bill of Materials. Using the End Panel drawing for reference, mark the tapered top edge of the top rails. Bandsaw and sand the pieces to shape.

2 Mark the locations and drill the dowel holes in the ends of the top rails (B) and middle and bottom rails C). See the Dowel detail for dimensions.

3 Cut a ⅜" groove ⅜" deep centered along one edge of the middle and bottom rails (C). See the End Panel drawing for reference.

4 Cut the end panel slats (D, E) to size from ⅜"-thick stock. (We planed thicker stock to size.)

5 Using the Routing the Stopped Round-Overs drawing for reference, clamp start- and stop-blocks to your router-table fence, and rout stopped round-overs along each edge of each slat where shown on the End Panel drawing.

6 Rout ⅛" round-overs along all edges of the rails (B, C).

7 To make the spacers (F, G, J, K), cut four pieces of stock to ⅜" thick by ½" wide by 48" long. Check the fit of the strips in the ⅜" grooves in the rails (C), and sand slightly if necessary. Rout ⅛" round-overs along the top edges of each strip. See the Dowel Hole detail accompanying the End Panel drawing for reference.

Fasten a long auxiliary wooden fence to your miter gauge, angle the blade 10° from square, and angle-cut the top end of each corner post. Use a clamp attached to the fence for a stopblock.

8 Crosscut the spacers (F, G) to length (we used a stop for consistent lengths.)

9 Dry-fit the slats (D, E) and spacers (F, G) between the rails (C) to check the fit. If adjustment is needed, trim the outside spacers (G). Then, starting with the end panel center slat (D) and working out, glue and clamp the pieces together, checking for square. Repeat for the other end panel.

10 Glue, dowel, and clamp each end panel assembly and top rail (B) between a pair of matching corner posts (A), checking for square. (We measured diagonally to check for square.)

Next, construct the side assemblies

1 Cut the top and bottom side panel rails (H) to size.

2 Rout ⅛" round-overs along all four edges of the bottom rails (H) and bottom edges of the top rails (H). Rout ¼" round-overs along the top edges of the two top rails.

3 Mark the locations, and drill the bushing holes ⅝" from one end of the top and bottom rails (H) to the sizes shown on the Guide-Rod Hole detail. Mark the centerpoint for the other bushing holes 48⅝" from the center of the holes just drilled. Now, drill the second set

Continued

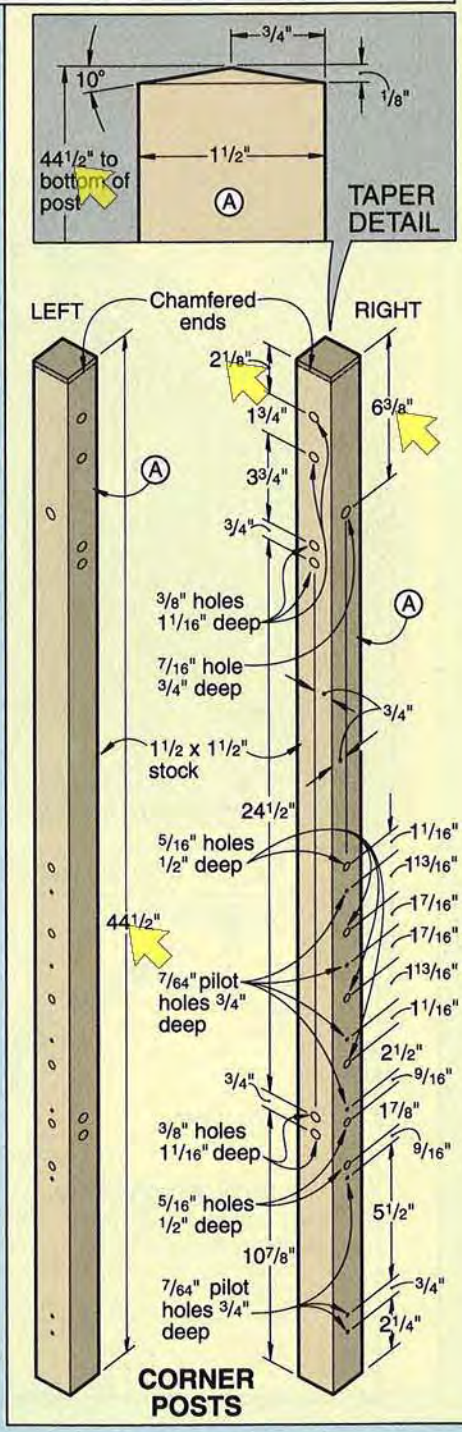

END PANEL

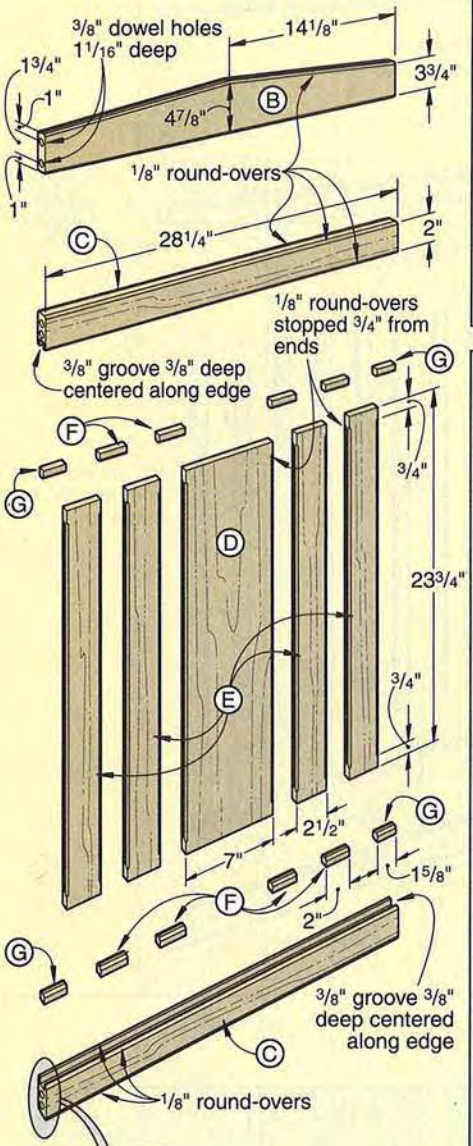

ROUTING THE STOPPED ROUND-OVERS

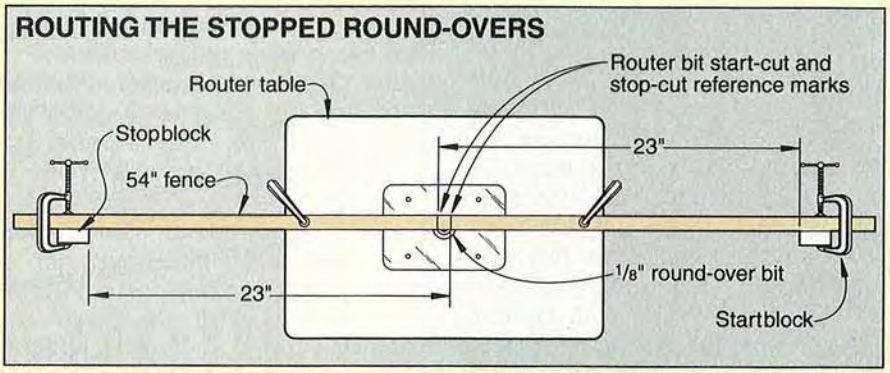

GUIDE-ROD HOLE DETAIL (FRONT SECTION VIEW)

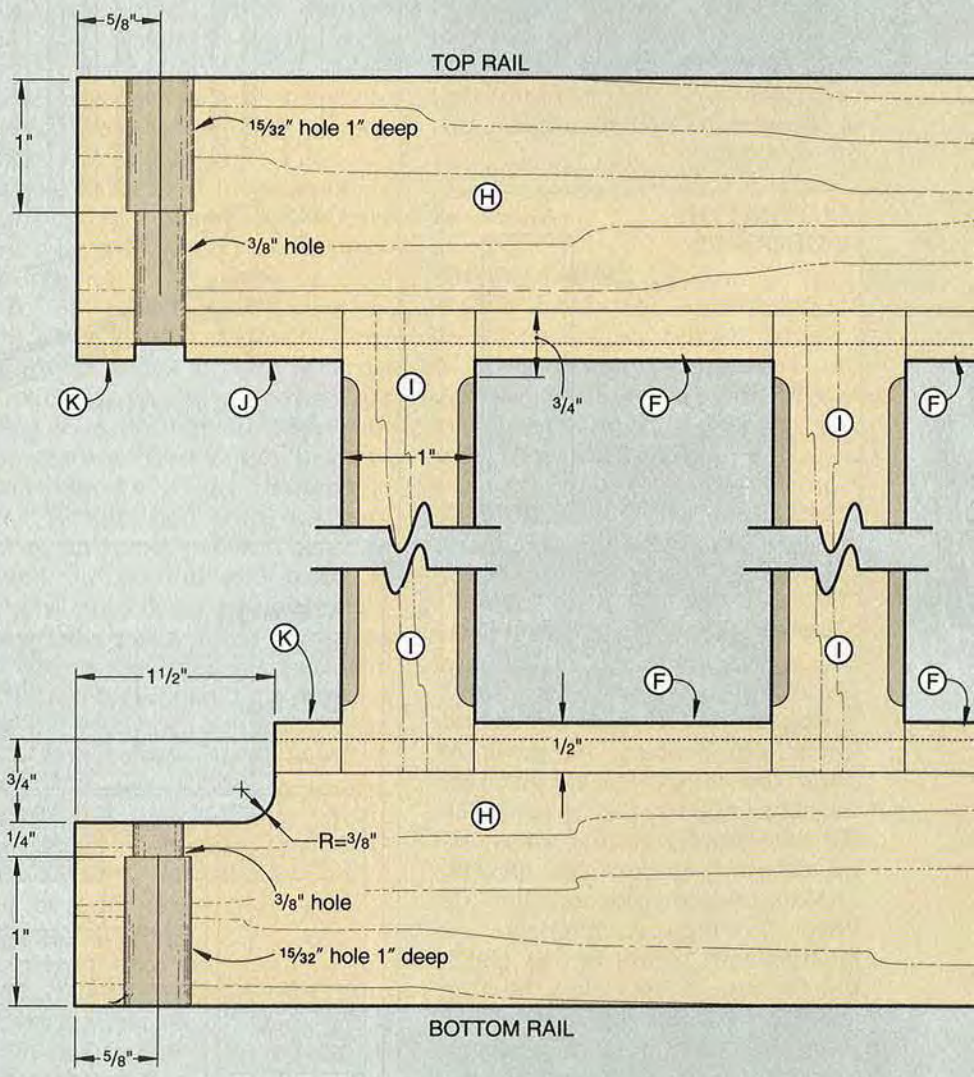

DOWEL HOLE DETAIL

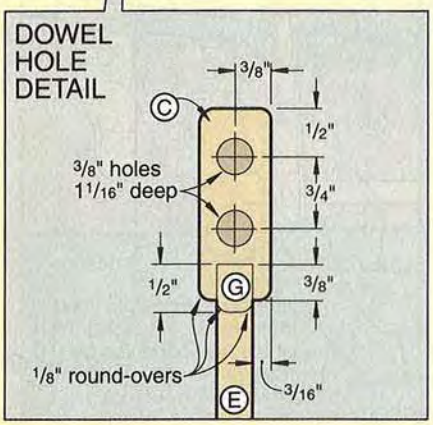

of bushing holes in the top and bottom rails. **(Important:** For smooth sliding of the side panels on the guide rods later, the hole centerpoints must be 48⅝" apart.)

4 Cut or rout a ⅜" groove ⅜" deep centered along the top edge of the bottom rails and along the bottom edge of the top rails.

5 Using the Guide-Rod Hole detail, mark the ⅜"-radiused notches on the top ends of both bottom rails (H). Cut the notches to shape, and drum-sand smooth.

6 So that the top rails can receive the plastic teething rail later, tilt your tablesaw blade to 45° and posititon the blade where shown on the Cutting the V-Grooves drawing *below*. Make a cut along each surface of both top (not the bottom) rails where shown on the drawing.

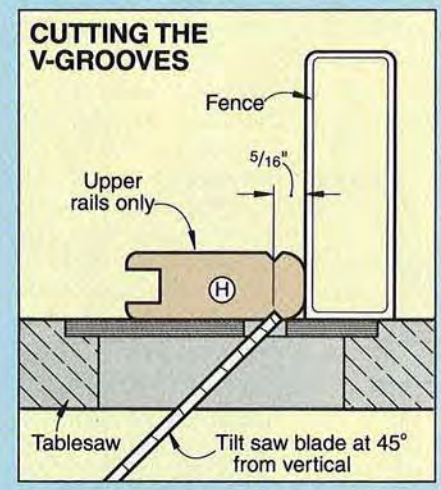

7 Repeat the process described under the heading *It's time to build the end panels* to machine the slats (I) and spacers (F, J, K). We recommend cutting a few extra slats and spacers. See the Bill of Materials for sizes and the Side Panel drawing for reference.

8 Dry-clamp the pieces to check the fit; trim if necessary. Starting at the center and working toward the ends, glue and clamp each side panel, checking for square. For a smooth sliding action of the side panels on the guide rods later, the panels must be square and the bushing holes aligned.

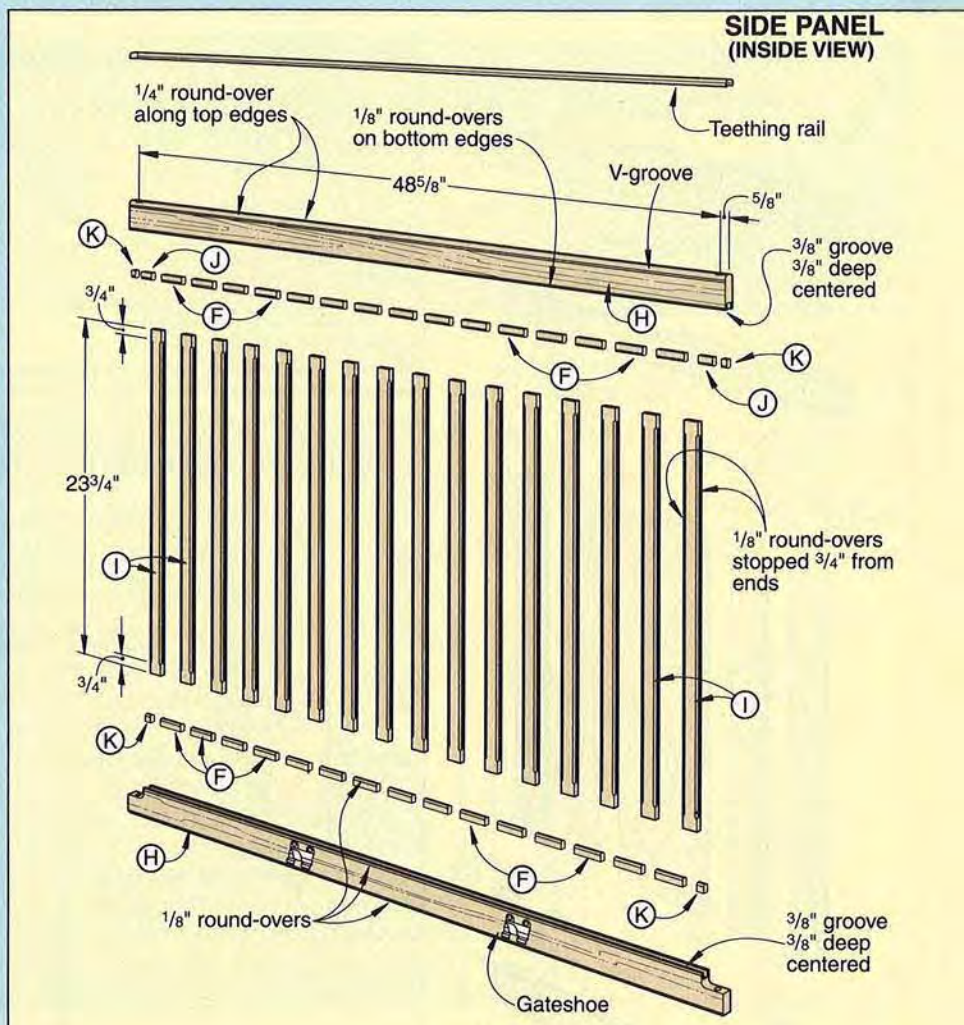

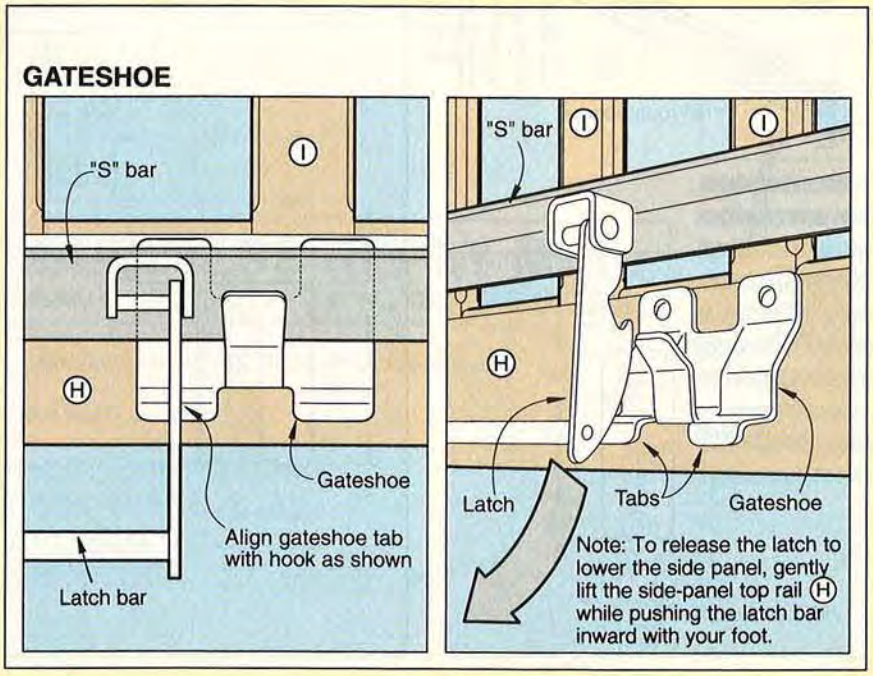
GATESHOE
"S" bar
I
H
Gateshoe
Align gateshoe tab with hook as shown
Latch bar
Latch
Tabs
Note: To release the latch to lower the side panel, gently lift the side-panel top rail (H) while pushing the latch bar inward with your foot.

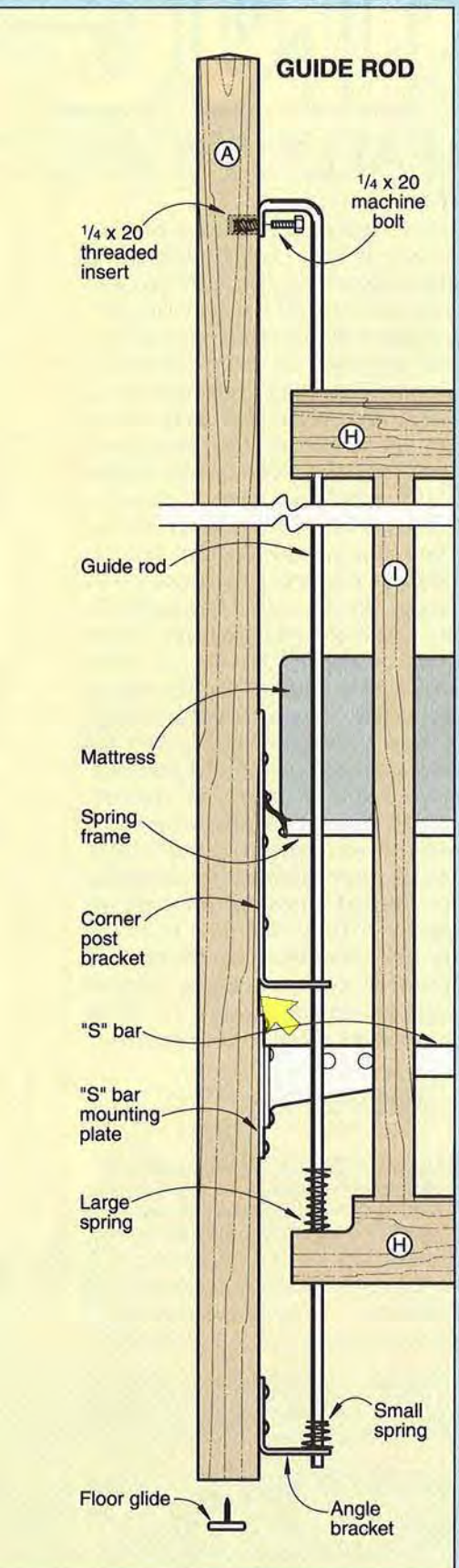

Assemble the pieces, and add the hardware

1 Considering the young tender hands that will be in contact with the parts, finish-sand the end and side panels. Apply the finish. (We applied Minwax fast-drying satin polyurethane, rubbing with 0000 steel wool between coats.)

2 Tap the plastic bushings into the holes into the top and bottom side panel rails (H).

3 Slide a plastic teething rail onto the top edge of each top rail (H).

4 Using the Guide Rod Assembly drawing and following the assembly instructions supplied with the crib hardware, work from the bottom up to attach the angle brackets, "S" bar mounting plates, and corner post brackets to the posts. For further reference, see the Exploded View drawing.

5 Drive a threaded insert squarely into the 7/16" hole in each corner post where shown on the Exploded drawing.

6 To join the end assemblies, attach the "S" bars to the "S" bar mounting plates already fastened to the corner posts. Slide the guide rods through the side panels, springs, and angle bracket where shown in the drawing at *left*. (We attached both side panels to one end panel. Then, we added the second end panel to the end/side panel assembly.)

7 Carefully position the assembled crib on its side on a blanket. Drill the mounting holes and attach a pair of gateshoes to the bottom rail, centering the latch hook on the inside tab of each gateshoe. See the Gateshoe drawing on the *opposite* page for reference. Carefully turn the crib over, and add a pair of gateshoes to the opposite bottom rail.

8 As shown in the photo *above right*, fasten the mattress spring to the four corner posts. Then, you'll need to purchase and add a crib mattress. (We purchased a standard 27½×52½" crib mattress at a local department store).

9 Add floor glides to the bottom of the crib if desired.

Fasten the mattress spring frame to each corner post bracket, and then add the crib mattress.

Buying Guide

- **Crib hardware.** Spring frame, 2–"S" bars with release latches, 4–"S" bar mounting plates, 4–angle brackets, 4–corner post brackets, 4–gateshoes, 4–steel guide rods, 8–plastic bushings, 2–plastic teething rails, 4–¼×20 machine bolts, 4–¼×20 threaded inserts, 4–1"-diam. floor glides. Kit no. 80953, $59.95 ppd. (This is a discounted price for *WOOD* magazine readers. Mattress not included or available through the Woodworker's Store.) Woodworkers' Store, 21801 Industrial Blvd., Rogers, MN 55374-9514. Or call 612/428-2199 to order.
- **Hardwood kit.** All the individual pieces shown in the Cutting Diagram cut slightly oversized in length and width from the thicknesses stated. Available in ash, cherry, or oak. Stock no. W59CR, $129.95 ppd. Heritage Building Specialties, 205 North Cascade, Fergus Falls, MN 56537. Call 800-524-4184 to order.

Produced by Marlen Kemmet
Project Design: James R. Downing
Photographs: John Hetherington
Illustrations: Kim Downing

Print this article

HOW TO SUCCEED AT AIR-DRYING

HERE'S AN APPROACH THAT REALLY WORKS

If you're thinking about seasoning your own stock, there's a lot to know before you begin. But in the end, it's how you build the stack that really counts.

Many woodworkers prefer air-dried stock to the kiln-dried variety because they say it works easier and offers truer color. Then, there's the money savings.

Air-drying your own stock can save you at least 50 percent over kiln-dried boards from your lumber retailer. But, doing it yourself does require time, effort, know-how, and the room for stacking and storing. To help you avoid the mistakes that result in firewood, we contacted an experienced, hands-on expert. (Also see *What you need to know about drying wood*, next page.)

Green wood, wet wood—but not all the same

Robert McGuffy has headed up the wood-drying sequence at the Anderson-Tully Company's Vicksburg, Mississippi, hardwood-processing facility for decades. At this complex, the largest of its kind in the U.S., Robert has the responsibility for air-drying, and then kiln-drying, about 70 million board feet of hardwood every year. And it's a mix that includes 65 species—all coming to him in varying degrees of wetness.

For an accurate reading with an electronic moisture meter, push the meter's probes into the wood at the center of the board, not at the edge or end.

"Southern species, when you first cut 'em, are different in how much moisture they have," Robert says. "Take white ash, for instance. It has about a 60 percent moisture content. Cottonwood and willow will run 180 percent. Red oak runs 80–90 percent."

Editor's note: The degree of wetness in wood is called moisture content, *and it's expressed as a percentage. But that percentage can often exceed 100 because it represents the ratio of the weight of the water in a piece of wood to the weight of the same wood when it is completely dry. For example, a piece of green wood weighs 50 lbs.; dry, it weighs 20 lbs. That means that the green wood contained 30 lbs. of moisture, or 30/20ths of its dry weight was water. As a percentage (30 divided by 20 equals 1.5), that's a moisture content of 150 percent!*

Such a variance, of course, means that each species—even where you live—requires either less or more time to dry down to the desired moisture content. At Anderson-Tully, the goal is to air-dry the boards to a 25 percent moisture content. Then, they're ready for the kiln where they'll be reduced to about eight percent.

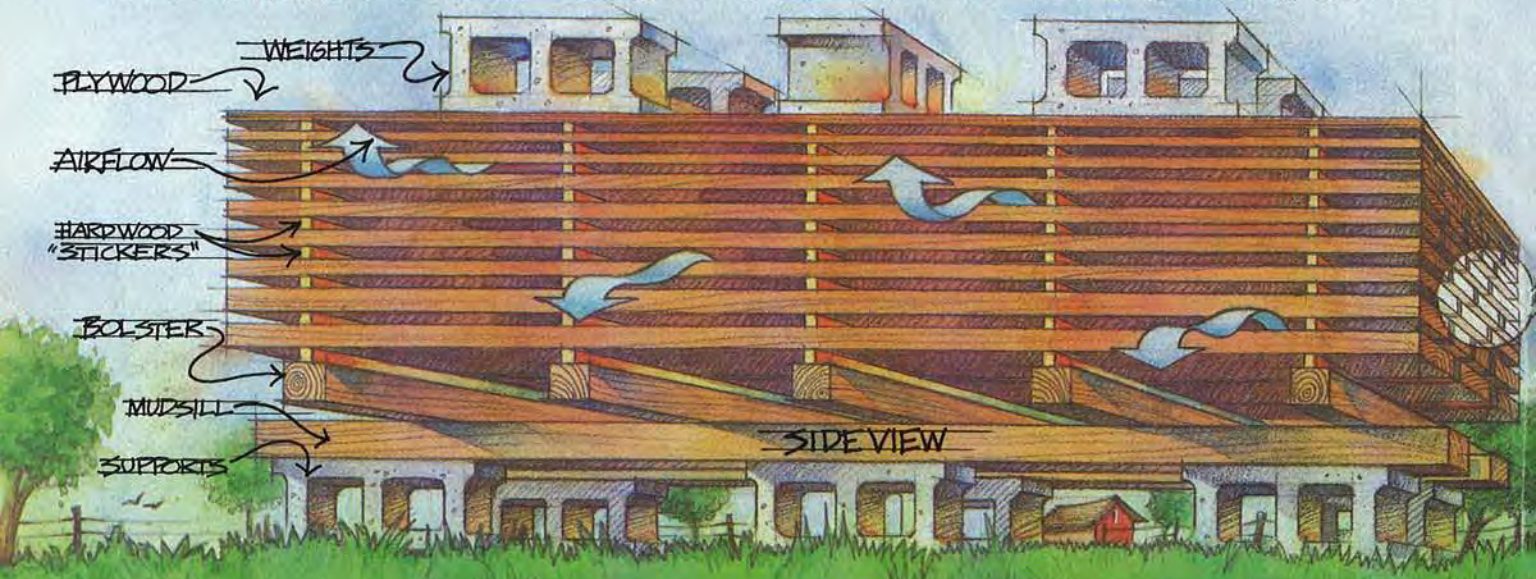

LUMBER

Without a kiln, you should try to achieve an air-dry moisture content of 15–20 percent. Further moisture reduction occurs when you move the boards indoors where they'll eventually reach their equilibrium moisture content (EMC). *(Note: The EMC equals a point where the wood neither takes on nor loses moisture due to the atmosphere.)*

According to the U.S. Forest Service's Forest Products Laboratory in Madison, Wisconsin, it takes 1"-thick green boards from 45–60 days to air dry to 15–20 percent moisture content in sunny, temperate, not-too-humid weather. If you live where it's colder and damper, count on more time. Inside, the drying process can prove slower, taking three or four months before the wood reaches its EMC and can be worked. But achieving workable stock means starting with a proper stack.

Site your stack, then build it right

Pick a storage spot for your boards that's in the open, but avoid low, damp, or boggy areas. And, keep the stack from under trees that can litter it with twigs and leaves. On the other hand, don't pick the sunniest spot in your yard—your boards might dry too rapidly. Keep wind direction in mind, too. Says the experienced Robert McGuffy: "The [prevailing] wind should blow through the side of the stack, not through an end. It'll dry much quicker going through the side, and you won't get end-checks."

At Anderson-Tully, Robert takes extra precaution so the green boards won't degrade in the drying process. "We dip them in an anti-stain sealer, and then put them on stickers [strips of wood that separate the board layers]," he says. "And we seal the ends."

Home woodworkers can do practically the same thing, notes Robert. "Paint the ends of all boards with latex paint [or a commercial sealant such as Sealtite 60 or Mobilicer-M]. Or, put double side-by-side stickers under them. The check won't go past that second stick. We make our stickers out of most any soft wood [meaning soft hardwood]: poplar, cottonwood, any low-grade lumber," Robert explains. "But I wouldn't make any out of walnut—that stains. The species of the stickers doesn't make that much difference, as long as you make them all the same size. Ours are ripped to 1⅛" wide from boards dressed to ⅞" thick. If the thickness varies, even a little bit, you'll have wavy boards."

Figure on cutting enough stickers per board course to lay them every 2' along the length of the boards. Determine the length of the stickers by estimating the width of the stack you intend to make. Once you cut the stickers, begin stacking the boards as shown *below left.*

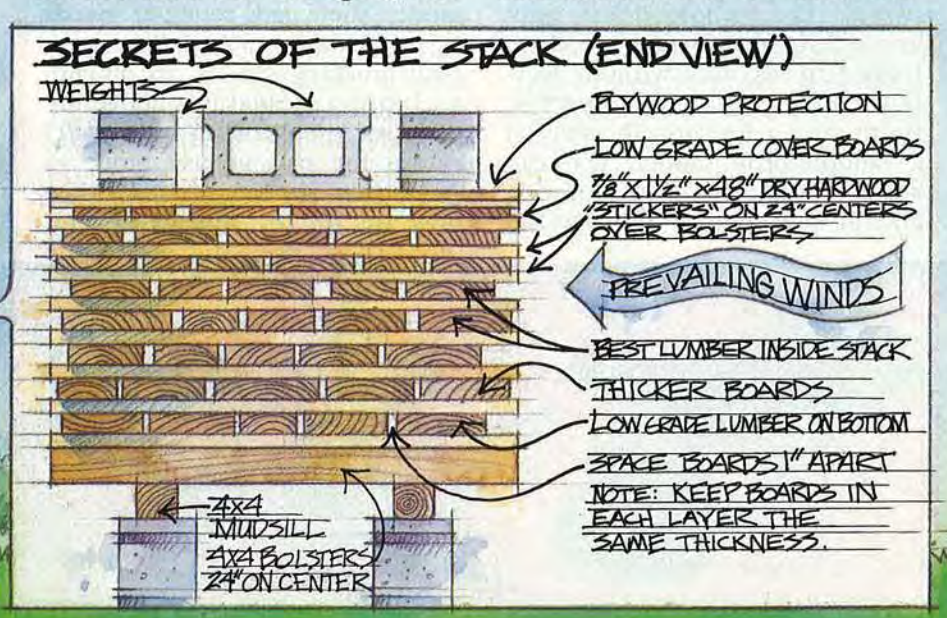
SECRETS OF THE STACK (END VIEW)
WEIGHTS
PLYWOOD PROTECTION
LOW GRADE COVER BOARDS
⅞" X 1½" X 48" DRY HARDWOOD "STICKERS" ON 24" CENTERS OVER BOLSTERS
PREVAILING WINDS
BEST LUMBER INSIDE STACK
THICKER BOARDS
LOW GRADE LUMBER ON BOTTOM
SPACE BOARDS 1" APART
NOTE: KEEP BOARDS IN EACH LAYER THE SAME THICKNESS.
4X4 MUDSILL
4X4 BOLSTERS 24" ON CENTER

What you need to know about drying wood

Drying your own wood can be great, if you follow this advice:

- Be sure to level the stack's foundation, but provide for a slight drainage slope. Put down a vapor barrier if the ground seems damp.
- Select only straight-grained, defect-free boards no thicker than 2" and less than 12" wide.
- Check the stack occasionally. Stains or mildew signal drying too slowly. Excessive checking means drying too fast.
- A moisture meter (about $100 at woodworking suppliers), as shown *opposite top,* is the most reliable means of determining moisture content. Check the wood every few weeks outdoors and after moving it indoors.

Written by Peter J. Stephano Illustration: Brian Jensen
Photograph: John Hetherington

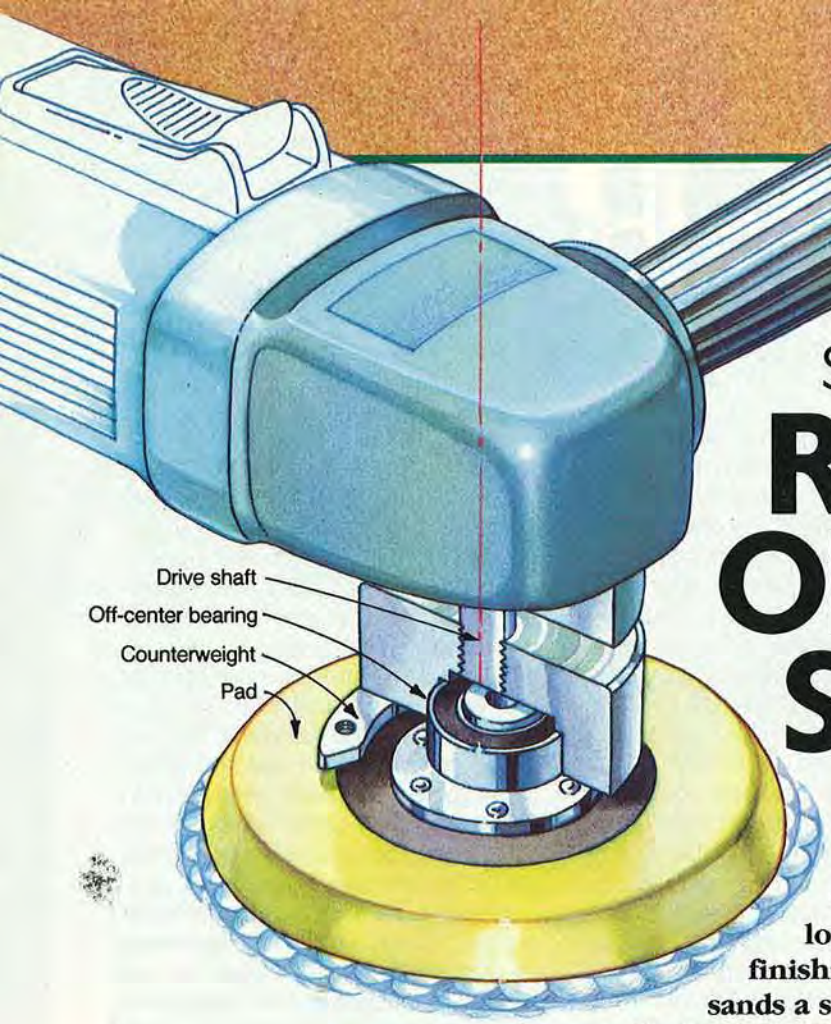

The tool to choose for fast, swirl-free results

RANDOM-ORBIT SANDERS

How would you like to own one sander that does the job of two? With a random-orbit sander you can. Like a belt or disc sander, this smoothing specialist removes loads of material in no time. Like an orbital finishing sander, a random-orbit sander finish-sands a surface to silky perfection. Sound too good to be true? Maybe it's time you gave one a try.

For many years now, auto-body-shop workers have leaned on air-powered random-orbit sanders, also known as dual-action (DA) sanders, for their finish work. But until recently, only woodworkers who owned air compressors could share in the benefits of these versatile machines. That all changed about three years ago when manufacturers introduced electric-powered random-orbit sanders. Since then, these tools have grown increasingly popular among woodworkers.

In our tests of 13 electric-powered random-orbit sanders, we found that the most aggressive models remove stock just as quickly as a belt or disc sander. But, random-orbit sanders don't leave scratches in a set pattern. That means you can sand flush two workpieces joined at a right angle (such as a face or door frame) in seconds without leaving tell-tale cross-grain scratches. By putting a fine-grit abrasive on a random-orbit sander, you can achieve still smoother surfaces, and in a fraction of the time required by an orbital finishing sander such as a palm sander.

How random-orbit sanders perform feats of magic

To do the work of two sanders, random-orbit sanders need to do two things at once. Like a disc sander, their pads rotate at speeds up to 12,000 rpm. And, like an orbital finishing sander, an off-center bearing located just above the pad (see the drawing *above left*) causes the pad to also move in tiny orbits. The size of these orbits depends on the offset between

Random-orbit sanders tested

the bearing and the tool's drive shaft (from 5/32" to 3/8" on most models). As you guide a random-orbit sander along a surface, these two motions overlap in a nonrepeating pattern to disguise sanding scratches.

Because the pad connects to the drive shaft via the off-center bearing, instead of by gears or a direct shaft, the number of pad rotations decreases as you apply greater sanding pressure to the machine. For this reason, random-orbit sanders perform most aggressively when you apply light pressure.

Of the units tested, only the Bosch 1370DEVS has a direct-drive feature that exempts it from this rule of thumb. You can adjust this machine so the pad rotations remain constant despite pressure. You'll find this feature worthwhile if you need to do lots of aggressive stock removal day after day, but most home woodworkers don't require a tool with this much brawn.

Motor-drive design: right-angle or in-line

You'll find two types of random-orbit sanders on today's market. With the first type, *right-angle,* shown on *page 42*, manufacturers simply add a random-orbit sanding head to an angle grinder.

The other type, called *in-line*, has a motor that stands vertically when you set the tool on its pad. (For examples of these, see the photo on *page 44.*) Manufacturers designed these machines exclusively for random-orbit sanding. As a group, we found them quieter and easier to control than right-angle machines, but less aggressive because they don't have as much torque.

You should be in control

Because of their aggressive nature, random-orbit sanders can be hard to control if they're not built for smooth operation. Since we consider control over stock removal vital to the success of any sanding operation, we put this quality at the top of the tool's requirements.

As you can see in the chart on *page 47*, under the "control" heading we rated the machines according to how much effort was required to maintain the direction of the sanders across the surface of a workpiece. The machines with "excellent" ratings went effortlessly wherever our hands guided them. Sanders with lesser grades wanted to wander off, or chattered along the surface. Although a tool's random-orbit mechanism largely affects its level of control, the features on the *following page* also come into play.

Continued

Air sanders: The way to go if you own a compressor

Although this story focuses on electric-powered random-orbit sanders, we also took a look at the three air-powered models shown *right* representing low-, middle-, and high-priced versions. We tested all three with a 5-hp, 15-gallon Sears compressor—the minimum size for intermittent woodworking applications according to officials from DeVilbiss, the manufacturer of Sears compressors.

We found that it makes sense to go the air-powered route if you own an adequately sized compressor. Even the least expensive model we tested, the Sears 18978 ($49.99), performed as well as any of the electric random-orbit sanders. However, this model does not have dust-collection capability—a drawback since these machines produce so much dust.

The two tested National-Detroit models—the EZQ ($125), and 9600 ($200 as shown with dust extraction)—were even easier to control than the Sears model. (You can buy either machine with or without the $40 dust-extraction option.) The model 9600 was the smoothest, most powerful machine tested, air or electric.

We tried these air-powered sanders, from *left:* Sears 18978, and National-Detroit models EZQ and 9600.

Metabo
0125

Milwaukee
6126

Fein
MSF636-1

RANDOM-ORBIT SANDERS

• **Handle type and balance.** As a group, the in-line machines feel more balanced, making them better suited to sanding large, horizontal surfaces. Since most of the machine's weight sits directly above the pad, the sanders don't have a tendency to tip toward one side of the pad. As shown in the photo *below left*, in-line sanders also have slender, easy-to-grip handles that put operator pressure either directly over the pad, or on opposing sides of the pad for balanced operation and even sanding results.

On the other hand, right-angle sanders feel tippy on horizontal surfaces because of the position of their motors and auxiliary side handles. To help you counterbalance the weight of the motor, the Skil 7484 comes with a front handle (see the photo *below right*). AEG offers a similar optional handle for its model VSRE600.

• **Variable speed and switches.** Since random-orbit sanders become harder to control at high speeds, consider spending the extra money for a variable-speed model. For example, some fixed-speed sanders operate at 10,000 rpms, but we found that 8,000 rpms was ideal for most tasks.

Manufacturers typically place the variable-speed controls for in-line machines on their trigger switches as shown *above*. We found these switches comfortable and convenient. On most right-angle sanders, you'll find a sliding switch on one side of the motor barrel and the variable-speed control at the end of the barrel as shown *opposite page, top left*. We

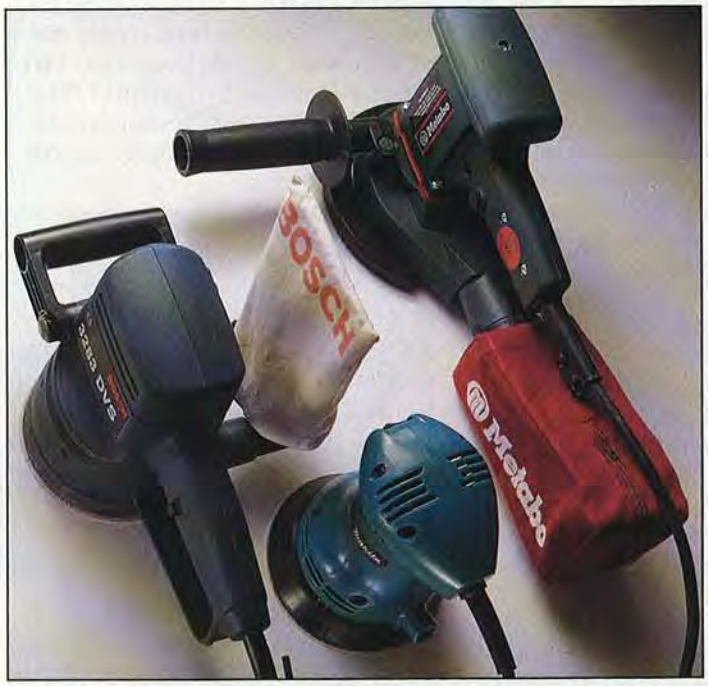

Each of these in-line sanders has a different handle style; from *left:* Bosch 3283DVS with front handle, Makita BO5000 with palm handle, and Metabo 0125 with side handle.

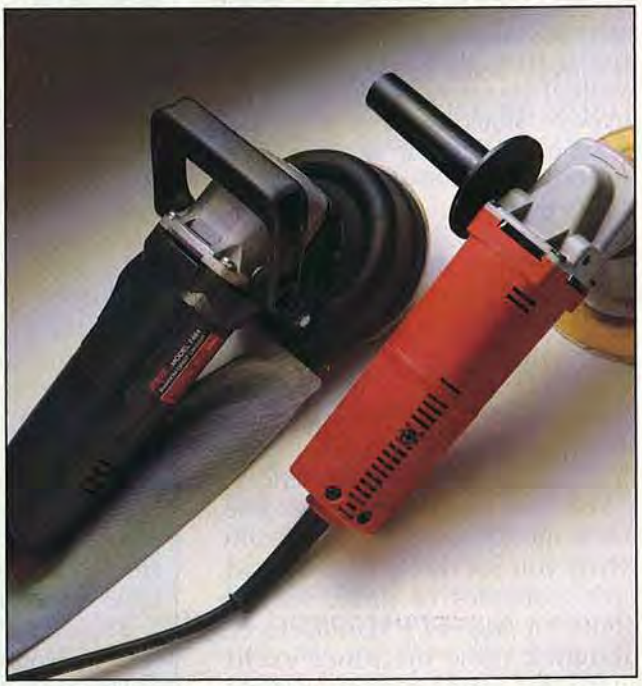

The Milwaukee 6126 at *right* has an auxiliary side handle like those found on most right-angle sanders. The Skil 7484 has a front handle for better balance.

Makita
BO5000

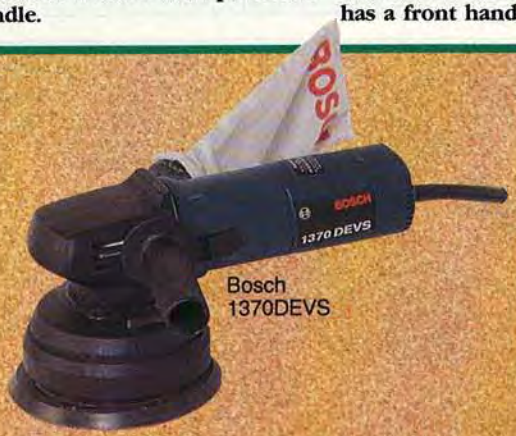

Bosch
1370DEVS

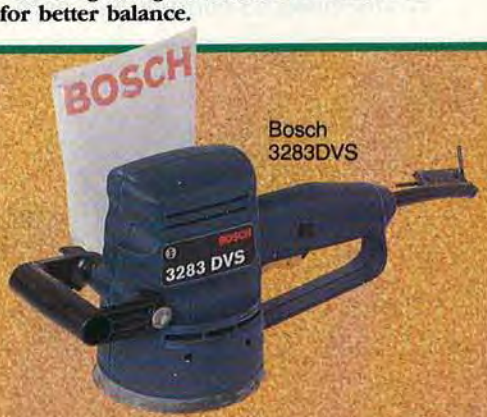

Bosch
3283DVS

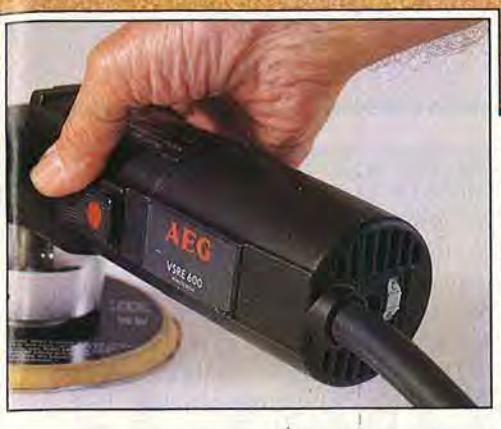

Far left: **Variable-speed, in line sanders such as the Bosch 3283DVS shown here have the variable-speed control built into the trigger switch.**

Left: **Right-angle sanders with variable speed have this control built into the end of their barrel-shaped motor housings.**

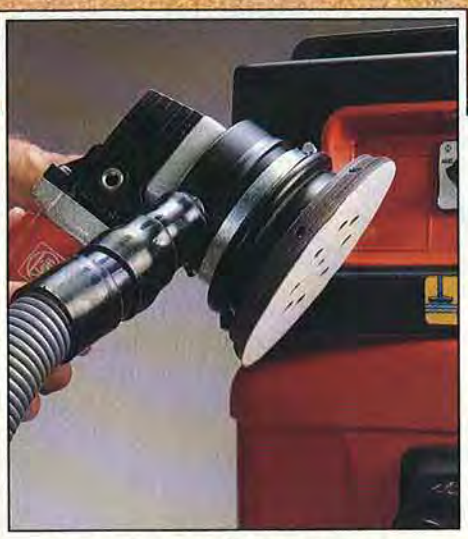

The Fein MSF636-1 sander and Fein vacuum proved to be a mighty dust-collection duo.

preferred the switch configuration on the in-line models because we could change speeds without slowing our progress or lifting the machine off the workpiece.

• **Aggressiveness.** In the chart on *page 47*, we rank the machines according to aggressiveness (how fast they help you get the job done). You'll want a machine that rates "good" or "better" if you routinely use it to level face frames or remove lots of stock in other applications.

• **Dust collection.** Random-orbit sanders make lots of fine dust. So, unless you work outside, you need a machine with dust collection. Sanders that collect dust through small holes in the pad and disc work best. And, sanders that allow you to combine through-the-pad collection with a vacuum via a vacuum port work best of all, keeping your shop air that much cleaner.

Of the tested machines, the Fein MSF636-1, in combination with a Fein vacuum, (see photo *above*) stood out as the ideal dust-collection system. These machines don't come cheap—$610 list for the sander and $625 list for the vacuum—but they set a dust-collection standard for the industry. In addition to through-the-pad holes, the Fein sander has holes

Continued

The true grit about abrasives for random-orbit sanders

When buying a random-orbit sander, you can choose between two systems for attaching abrasive discs to the machine's pad. The first, pressure-sensitive-adhesive (PSA), also known as sticky-back, has a thin adhesive layer that holds the disc to the pad. These discs are relatively inexpensive and widely available. But, you have to be careful not to heat them up, or leave them on the pad too long. Otherwise, the disc may not easily release from the pad, and you'll have to tediously peel it off in small pieces.

Recently, hook-and-loop discs, which also go by the brand name Velcro, have been gaining in popularity. These discs cost up to twice as much as PSA discs, but offer you greater convenience. Why? You can quickly disconnect these discs, no matter how hot they've become or how long they've been on the pad, and reuse them. The sticky-back PSA discs tend to attract dust once you remove them, rendering the sanding discs useless.

In our tests, the most commonly available PSA and hook-and-loop discs wore out in about the same amount of time. But, we came across a new product from 3M called 255L Stickit Gold Film Discs that far outlast other PSA products. Although this polyester-film-backed product costs nearly twice as much as other PSA abrasives, we found the cost justified because it lasted 5–7 times longer in our tests. Look for the product in auto-paint supply stores.

Our advice: If you make smaller projects and need to change grits frequently, go with a machine that has a hook-and-loop pad. If you do lots of continual sanding with one grit, PSA discs will save you money in the long run. And, if you go through lots of PSA discs then give the 255L Stickit Gold Film Discs a try.

Ryobi
RS115

AEG
VSRE600

Porter-Cable
33

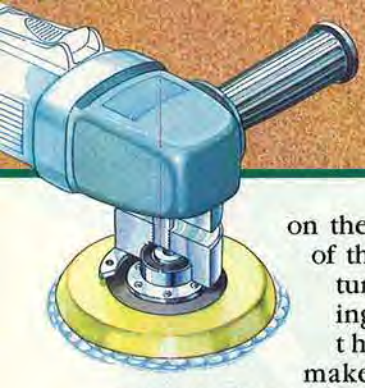

on the outside edge of the pad to capture dust escaping from under the pad. To make things convenient, the vacuum has an automatic setting that turns the machine on and off as you turn the sander on and off. And, we've never heard a vacuum that's as quiet as this model. At about 60 decibels, we could not hear the vacuum above the quietest sanders in our test.

How to turn your angle grinder into a random-orbit sander

If you already own a 4–5" angle grinder, you can make it do double duty by outfitting it with a random-orbit sander head. We tried the Marshco Random-Orbit Sanding Head and found that it works smoothly and reliably. The Marshco head comes standard on the AEG VSRE600, and we used it as the model for the cutaway illustration shown in the corner *above* and throughout this article.

Before going this route, keep in mind that the manufacturer does not offer a dust-collection option for it. The standard version has a vinyl pad for PSA abrasives, but you can buy an optional adapter for hook-and-loop abrasives. You can purchase one for most any grinder for $62.95 ppd. by contacting Marshco at 207/722-3523.

• **Pad size.** Most random-orbit sanders come with 5" or 6" pads. Either size will suit the needs of most home woodworkers, but if you spend more than 10 hours in your shop each week you may want to opt for a 6" model. The larger pads help you work slightly faster, but the smaller pads add to a machine's level of control. You'll find that 6" sanding discs cost about 25 to 40 percent more than 5" discs.

Recommendations

If you own an adequate air compressor, you'll get the most performance for your dollar by purchasing an air-powered random-orbit sander. If not, these sanders offer the best value in electric-powered models:

• **Under $90:** The Black & Decker 7474 tops this class, although the Ryobi RS115 and Porter-Cable 333 run a close second. The B&D vibrated a little more than the Ryobi or P-C units, but has some features that set it apart from the under-$90 crowd. In addition to efficient dust collection, the B&D unit has a pad-breaking system that keeps its pad at a fixed speed of 500 rpm, no matter if you have it on or off a work surface. This feature may save you from marring a surface. Why? Other random-orbit sanders spin at up to 12,000 rpm when not in contact with a work surface, so when you touch these machines to a workpiece the surface acts as a brake and their pads slow down considerably. (This rule does not apply to direct-drive machines such as the Bosch 1370 DEVS described earlier.) This creates a potential for gouging, but it isn't a problem so long as you remember to always hold the pad of a random-orbit sander in contact with a surface before turning it on.

The Ryobi has variable speed, and a dust-collection canister, but doesn't hook up to a vacuum. We found the P-C machine slightly harder to control because of its fixed speed of 12,000 rpm, but you can attach a 1" vacuum hose to it. You can also buy the Ryobi unit as the Sears model 111604 for about $70. The Sears model differs in that it has a fixed speed of 11,000 rpms, and a PSA pad.

• **Over $90:** The Bosch 3283DVS, Porter-Cable 7336, and Skil 7484 get our nod here. To determine which machine is best for you, you need to weigh the features and price tags of each model. The Bosch offers you the most control because of its in-line design, but the Porter-Cable and Skil have more power. The Skil and Bosch machines have built-in dust-collection systems, but the optional dust-collection system for the P-C costs about $30.

If you have a preference in abrasives, keep in mind that the Bosch takes hook-and-loop only; the Skil accepts hook-and-loop, but you can buy an optional PSA pad; and the P-C comes with a PSA pad, but you can purchase a hook-and-loop pad, if that suits you better. The P-C features the sturdiest construction of this trio. And, the Bosch and P-C have variable speed; the Skil does not.

AEG
TXE150

Black & Decker
7474

A BAKER'S DOZEN RANDOM-ORBIT SANDERS

MANUFACTURER (1)	MODEL	TYPE (2)	PAD SIZE (INCHES)	PAD TYPE (3)	SPEED (4)	AMPS	HANDLE TYPE (5)	SWITCH TYPE (6)	DUST COLLECTION (7)	NOISE LEVEL (8)	PERFORMANCE EVALUATION (9) AGGRESSIVENESS (10)	CONTROL (11)	VIBRATION	OVERALL RATING (12) PERFORMANCE	VALUE	CORD LENGTH (FEET)	OPTIONAL ACCESSORIES (13)	COUNTRY OF ORIGIN (14)	WEIGHT (POUNDS)	PRICE LIST	PRICE SELLING (15)
AEG	VSRE600K	R	6	P	1,000-9,000	4.8	B	SL	NONE	68-93.5	G	E	G	8	8	10	CC,FH, HL, SD	G	5	$284	$160
	TXE150	I	6	H	4,000-5,500	3.5	T	TR	B, S, TP	79-88.5	G	E	G	8.5	8	9.4	BP, SA, SD VH, VP	G	5.5	298	180
BLACK & DECKER	7474	I	5	H	500*	2.8	T	TR	B, S, TP	83.5	F	G	F	7	9	6	HS, SD, VH, VP	E	4.5	100	80
BOSCH	3283DVS	I	5	H	8,000-11,000	2.3	T	TR	B, TP, VP	73.5-86.5	F	E	G	8	10	6.5	BP, DS, HS, SA, SD, VH	S	4	159	100
	1370DEVS	R	6	H	4,800-11,000	5	B	SL	B, TP, VP	78-97	E	E	F	9	8	13	BP, HS, SA, SD, VH	S	5.3	481	260
FEIN	MSF636-1	R	6	H	7,500	3.6	B	SL	TP, VP	91	E	E	G	9	7	9.5	SD	G	6.4	610	495
MAKITA	BO5000	I	5	H	10,000	1.7	P	R	TP, VP	74	F	F	E	6	7	7	SD, VH	J	3.4	118	70
METABO	0125	I	5	H	5,000-12,000	1.8	T	TR	B, S, TP, VP	66-72.5	F	E	E	8.5	8	8.3	HS, SD	G	5	213	165
MILWAUKEE	6126	R	6	P	10,000	5.5	B	T	NONE	95.5	G	G	G	7	7	8	HS, SD	U	5.2	205	125
PORTER-CABLE	333	I	5	H	12,000	1.7	P	R	B, TP, VP	72.5	F	G	E	7	8	7	PA, PP, SD	U	3.6	125	80
	7336	R	6	P	2,500-6,000	3.7	B	SL	OPTIONAL	74-86	G	G	G	8.5	9	10	DS, HS, SD, VH	U	5.5	235	135
RYOBI*	RS115	I	4 1/2	H	0-11,000	2	T	TR	B, TP	64-85	F	G	G	6.5	8	6.3	BP, SA,SD	U	3.2	134	75
SKIL	7484	R	5	H	10,000	6	B	SL	B, S, TP, VP	99	G	G	F	7	8.5	6.3	PA, SD	U	5	160	105

NOTES:

1. (*) Same machine sold as Sears no. 11604. Sears model has PSA pad instead of hook-and-loop pad, and a fixed speed of 11,000 rpms.
2. (I) In-line
   (R) Right-angle
3. (H) Hook-and-loop
   (P) Pressure-sensitive adhesive
4. Revolutions per minute. Listings for machines with variable-speed capability include low- and high-end of range.
   (*) Armature spins at 11,000 rpm's, but pad-breaking system maintains 500 rpm pad speed under load and no-load conditions.
5. (B) Barrel with auxiliary handle
   (P) Palm style
   (T) T-handle
6. (R) Rocker
   (SL) Sliding
   (TR) Trigger
7. (B) Bag
   (S) Shroud
   (TP) Through the pad
8. Measured in decibels from a distance of three feet.
9. E Excellent
   G Good
   F Fair
10. Judged on rate of stock removal.
11. E Little effort required to maintain direction of sander.
    G No chatter, but some effort required to maintain direction of sander.
    F Sander chatters and bounces somewhat, making control difficut.
12. Rated on a scale of 1 to 10, with 10 being the highest possible score.
13. (BP) Buffing pad
    (DS) Dust shroud
    (FH) Front handle
    (HL) Hook-and-loop pads and abrasives
    (HS) Hard or soft backing pads
    (PA) Pressure-sensitive-adhesive pad
    (SA) Sponge applicator pad
    (SD) Sanding discs
    (VH) Vacuum hose
    (VP) Vacuum port
14. (E) England
    (G) Germany
    (J) Japan
    (S) Switzerland
    (U) United States
15. Selling price based on advertisements, catalogs, and dealer inquiries at time of article's writing.

Print this article

PAINTING, WITHOUT

Do your palms start sweating when you lay down the gouges to pick up your paintbrushes? You're not alone. Painting intimidates a lot of carvers. Here's how acrylic paints can help you break out of that crowd and give your carvings the colors they deserve.

Plain old water. That's what makes acrylic paints such a joy to use. You don't need smelly solvents to thin acrylics or clean your brushes—just water.

When you paint with acrylics, you're putting on solid particles of plastic resin and color pigment suspended in water. The water evaporates, drying the paint and leaving the color bonded to the wood in an impermeable acrylic-plastic film.

Dried acrylic paints are waterproof, even washable with soap and water. The colors don't yellow with age, and the flexible coating resists cracking and peeling.

A jarring choice to make

Art-supply and craft shops sell these versatile paints in tubes or jars. Tube acrylics work fine, but for carvings, we prefer the liquid acrylics in jars. Concentrated colors—sold in jars for tole and craft painting—are great for carvings.

Liquid acrylics cover evenly and flow smoothly from the brush so that you can neatly paint fine lines and details. They require less thinning than tube paints, and dry without brush marks, too.

Mix with some big names

You'll find acrylics in scores of colors. However, a dozen or fewer will be enough for most carvers.

When buying colors, look for these standard pigment names to build a basic set: phthalocyanine blue (ask for thalo blue), cadmium red medium, cadmium yellow medium, phthalocyanine green (thalo green), burnt umber, burnt sienna (browns), Mars black, and titanium white. All of these have high tinting strength, which means a little goes a long way in mixing or tinting.

With these basics, you can mix almost any color. To get skin tones, for instance, mix burnt sienna and white. (Some manufacturers sell pre-mixed flesh tones, too.) For guidance in color-mixing, buy a color wheel from your art-supply dealer.

Adding extra colors to your palette widens your range. Some good choices: ultramarine blue, naphthol crimson, permanent green light, and Turner's yellow.

Media sensations

Acrylics thin with water. But beware; too much water weakens the film, allowing the color to rub off. Instead, use polymer medium (or polymer medium and water) to thin an acrylic more than 50 percent. Clear polymer medium—acrylic paint without the pigment—comes in either gloss or matte finish.

To maintain the acrylics' flat finish, thin with matte medium. Gloss medium increases the shine—handy for adding luster to

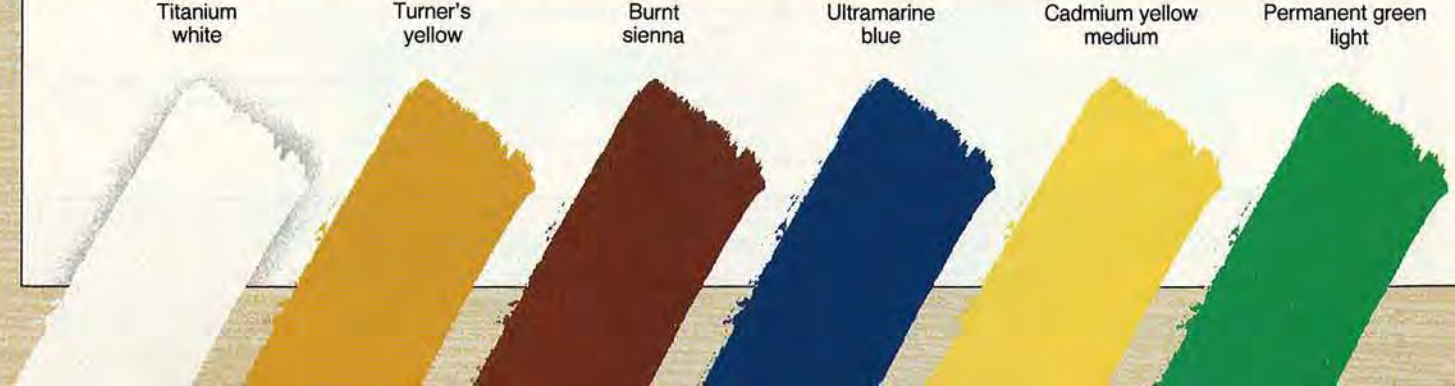

THE PAIN

A carver's guide to acrylics

a figure's belt buckle or buttons, for example. For an overall shine, brush a glaze coat of gloss medium onto the painted carving. For a semi-gloss coating, mix gloss and matte media.

For an aged appearance, there's crackle medium to craze the painted surface. And you can even patch flaws or build up features with two special media: gel medium and the putty-like acrylic modeling paste, both tintable.

A caution: Before mixing media and paints from different manufacturers, test a small batch. You won't have compatibility problems, though, painting over a dried coat with another brand.

Any old brush will do

Acrylics don't require expensive brushes; any kind will work fine. But do buy at least one high-quality brush that keeps its point and holds paint well. It will take the fear out of painting small details.

Synthetic bristles offer a big plus over natural bristles: Dried acrylics will wash out of them with soap and water. But let acrylics dry in a brush with natural bristles, and you may as well throw it away.

A good starter set for most carvers includes #10 and #6 flat shaders, a #5 round, and a #1 liner. Many dealers sell inexpensive craft brush assortments, which are perfectly suitable.

Get primed for painting

You'll get richer color coats if you first prime the wood with acrylic gesso. That's because bare wood absorbs water from the paints, drying them so fast that brushing on an even coat becomes difficult. Gesso, usually white but available in other colors, seals the wood. It also provides a uniform base coat, eliminating color variations.

For a faded, aged look, apply a transparent wash of thinned acrylic right over bare wood. As an alternative to thinning the paint excessively, tint acrylic natural wood stain with a bit of acrylic color to achieve the effect.

Puttin' on the paints

For easier thinning and mixing when you paint, pour some of each color you're using onto a palette—an old dinner plate or a plastic coffee-can lid will work fine. Spray the palette occasionally with a plant mister to keep the paints from skinning over.

Acrylics dry so quickly that you can lay on multiple coats within minutes of each other. (Force-dry the paint with a hair dryer to speed the process even more.) And, painting over a dried coat won't smear or mix the colors. This makes it easy to correct mistakes; just paint over them.

This fast-drying can work against you sometimes—when you try to blend colors on a wild life carving, for instance. Keeping the paint and brush wet may allow you enough blending time. (That's another job for your plant mister.) Or, add acrylic retarder to the paint to slow drying.

This basic brush set meets most carvers' painting needs. From *left*, the #10 shader, #6 shader, #5 round, #1 liner.

Acrylics pose one hazard to your personal appearance. When acrylic paint dries on clothes, it can be virtually impossible to remove (acetone does as good a job as anything). So don your grubbies for painting. Or be tidy. While wet, acrylic cleans up with a damp rag or sponge. It washes off skin, wet or dry.

Written by Larry Johnston
Photographs: John Hetherington

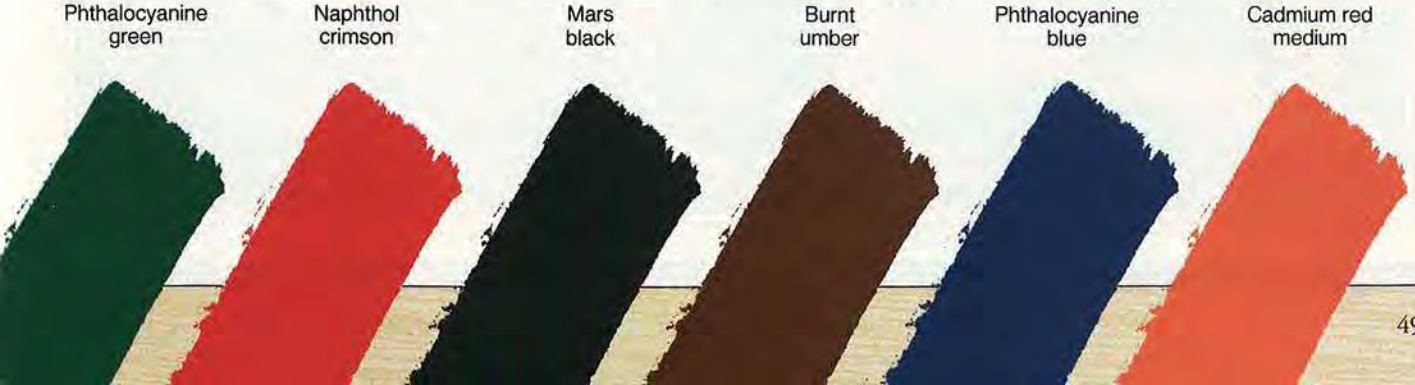

Elegant-Oak

Style, sturdiness, and expandability make this the perfect dining table for either a traditional or contemporary home. We modeled our solid-oak design after popular turn-of-the-century Mission furniture. Our table includes slides and leaves so it can comfortably seat up to eight. Also, there's no need to shop around for matching chairs—you'll find the plan for the slat-back version shown here in our next issue.

Dining Table

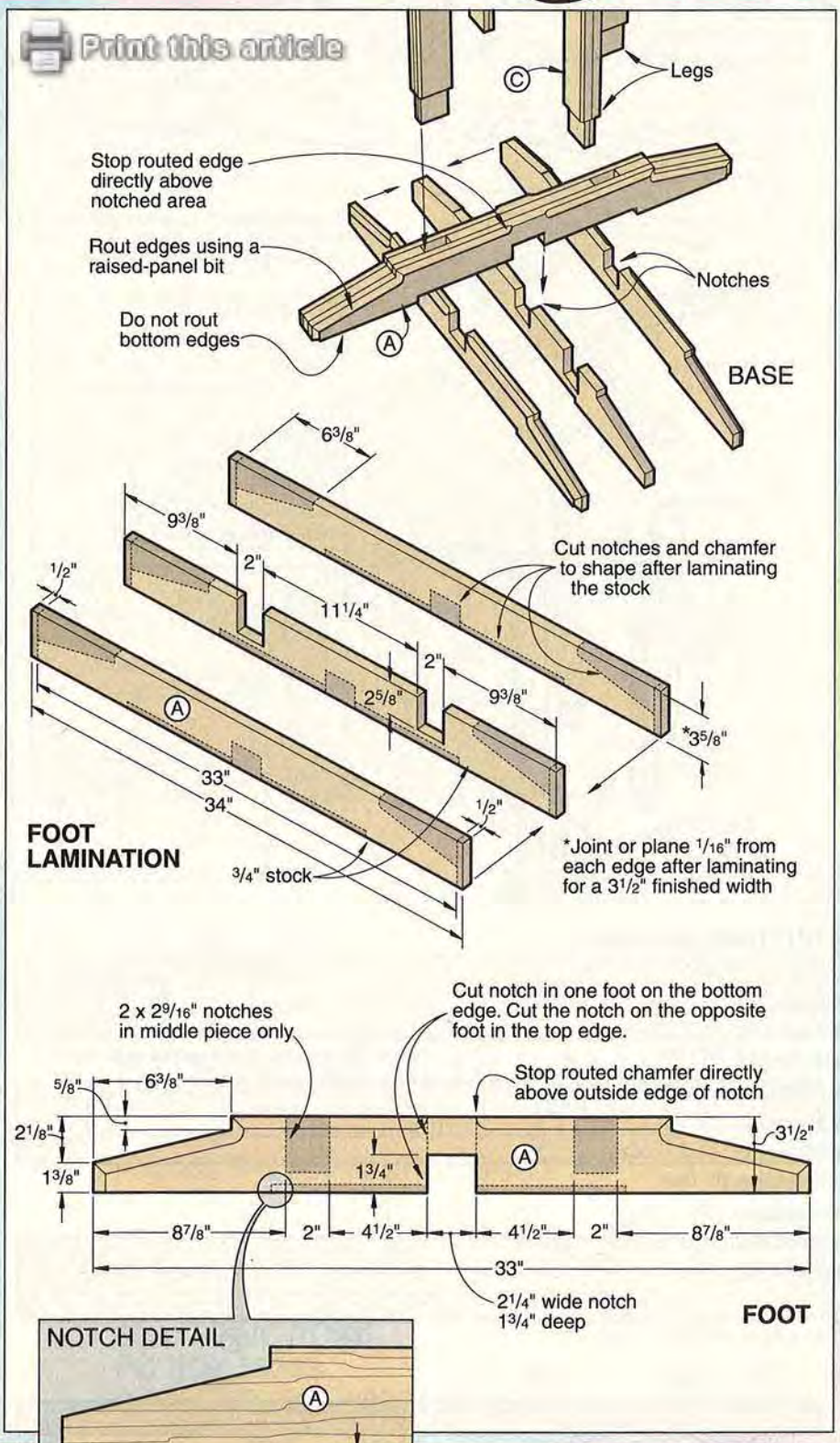

For a wobble-free table, start with the notched feet

1 From ¾"-thick stock, rip and crosscut six pieces to 3⅝" wide by 34" long for the feet (A). As dimensioned on the Foot Lamination drawing, the length shown (34") is 1" longer than the finished length to allow for trimming the ends in step 5.

2 Mark and cut a pair of 2×2⅝" notches in two of the six pieces where shown on the Foot Lamination drawing. (We bandsawed the notches to shape.)

3 Spread an even coat of glue on the mating surfaces of the three pieces making one foot. With the edges and ends flush and a *notched piece in the middle*, glue and clamp the pieces face-to-face to form one foot (A). Remove any glue from the notches before it hardens. Repeat the process to laminate the second foot.

4 Scrape the glue from the bottom edge of each foot, and then joint or plane that edge flat, removing no more than 1/16" of stock. Now, joint or plane the opposite edge for a 3½" finished width.

5 Cut the feet to length (33"), trimming an equal amount from both ends to keep the notches equally spaced from the center.

6 Using the dimensions on the Foot drawing for reference, mark and cut the notched recess across the bottom, the chamfered top ends, and the mating 1¾×2¼" notches on each foot. *Note that the notch in one foot is cut in the bottom edge while the notch in the other foot is cut in the top surface.* Sand the cut edges smooth to remove saw marks.

7 Fit your table-mounted router with a raised-panel bit (we used a Bosch 85583M). Rout along the edges of each foot where shown on the Foot and Base drawings.

Continued

Add the cross members and uprights to finish the base

1 Using the dimensions on the Cross Member drawing, cut 10 pieces for the two cross members (B). As noted on the drawing, *the length of the middle piece must be the same as the distance between the notches in the top of the feet.*

2 With the edges and ends flush, dry-clamp each cross member. Check the alignment of the mortises in the cross members against the notches in the feet. Trim the cross member parts if necessary for alignment. Laminate the pieces to form the two cross members.

3 Cut the mating 17/32 × 2¼" notches centered from end to end in the cross members. When mating the cross members together at the notches, the top and bottom surfaces of the cross members must be flush.

4 Miter-cut a ¾" chamfer across the ends of each cross member.

5 For mounting the tabletop to the cross members later, drill and countersink a pair of ¼" mounting holes in each cross member, 1¼" from the ends where shown on the Base drawing and accompanying Screw detail. Spread glue in the notches, and clamp the cross members together.

6 Cut the four uprights (C) to size (we laminated two ¾" pieces for each 1½"-thick upright). Using the Tenon detail accompanying the Base drawing, cut a tenon on both ends of each upright.

7 Rout a ¼" chamfer along each edge of each upright.

Assemble the base, and add the slats

1 Dry-fit the base pieces (A, B, C) to check the fit. Trim if necessary, and then sand smooth.

2 Glue and clamp the base (A, B, C) together, checking for square. Remove any excess glue now with a damp cloth, or wait until it forms a tough skin and remove it with a chisel.

Continued

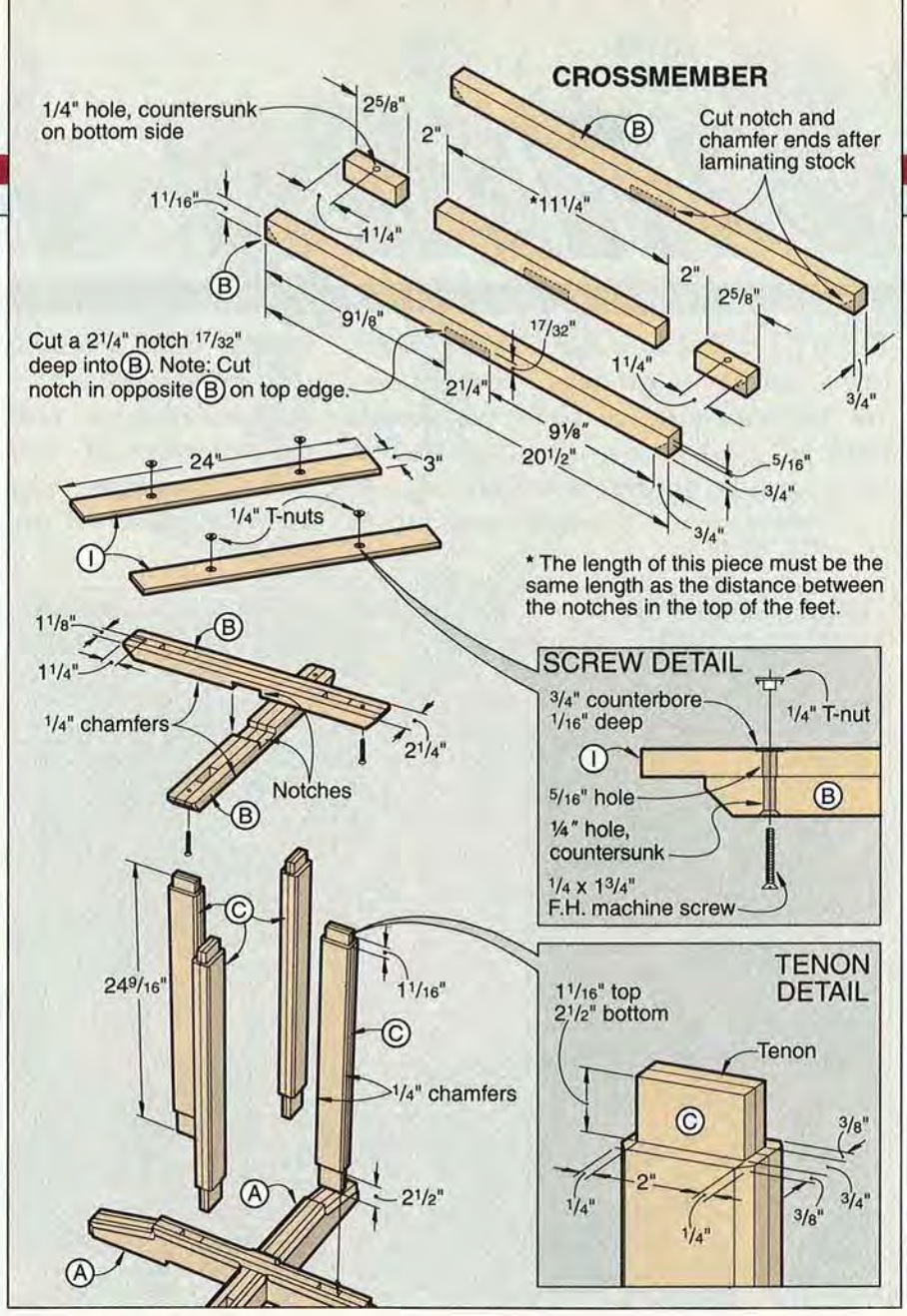

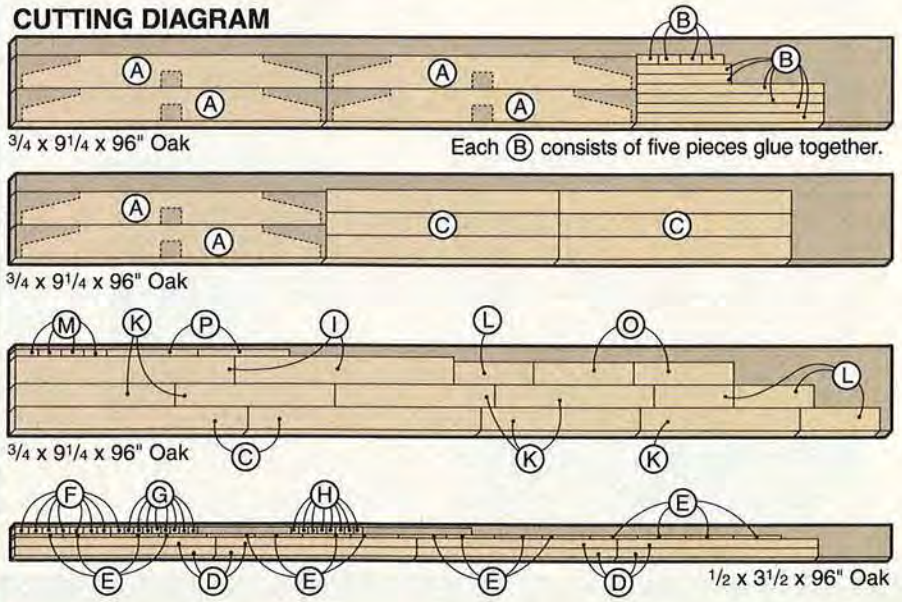

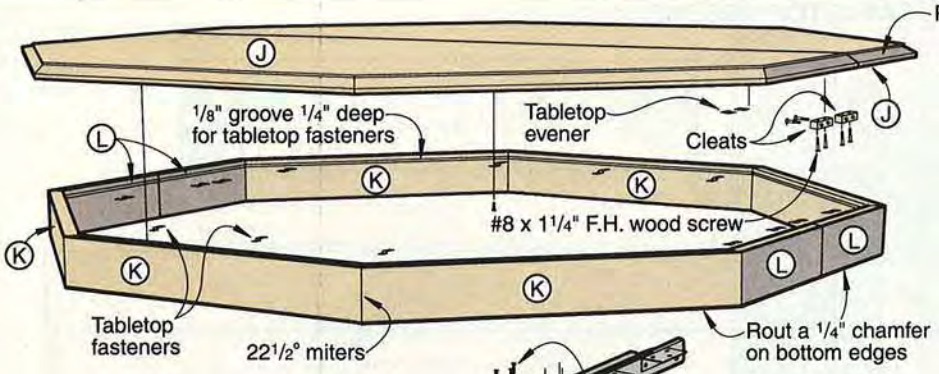

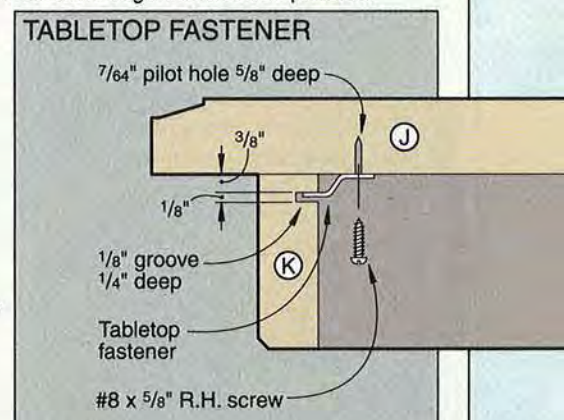

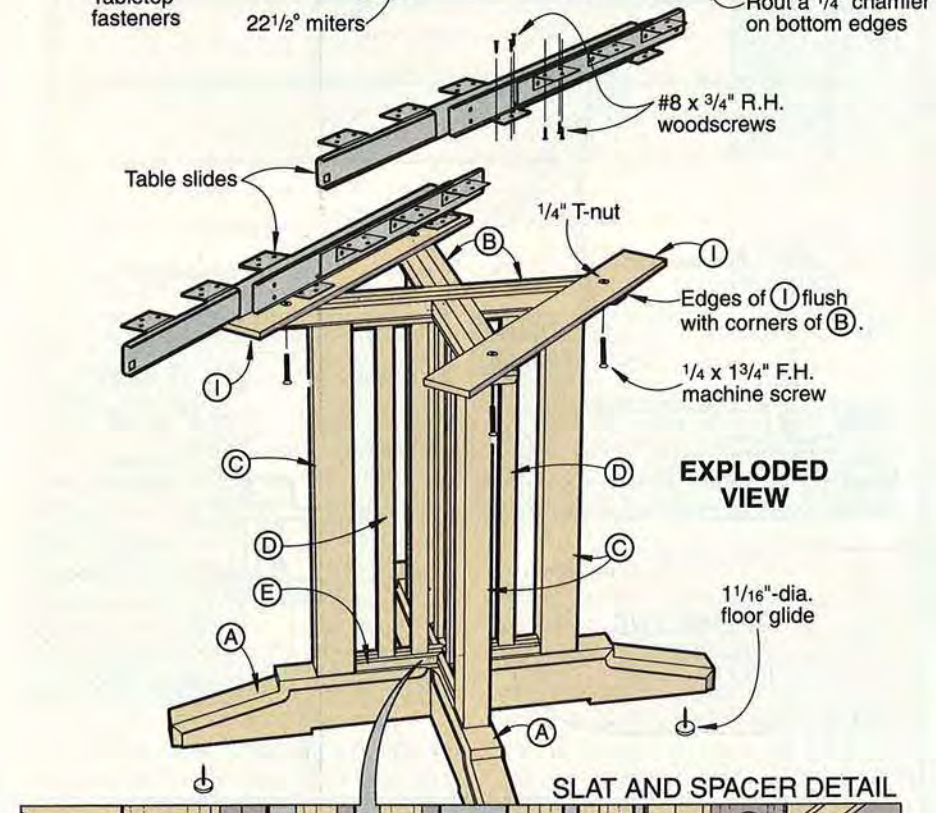

Bill of Materials

Part	Finished Size T	W	L	Matl.	Qty.
BASE					
A* feet	2¼"	3½"	33"	LO	2
B* cross members	1 1/16"	2¼"	20½"	LO	2
C uprights	1½"	2½"	24 9/16"	LO	4
D slats	½"	1"	21"	O	8
E* trim	⅜"	½"	5⅛"	O	16
F* spacers	½"	¾"	1½"	O	8
G* spacers	½"	¾"	1"	O	8
H* spacers	½"	¾"	⅞"	O	8
I supports	¾"	3"	24"	O	2
TABLETOP (2 HALVES)					
J* tabletop halves	1 1/16"	22 3/16"	44⅜"	EO	2
K rails	¾"	2½"	17½"	O	6
L rails	¾"	2½"	8¾"	O	4
M cleats	¾"	¾"	2½"	O	4
ONE LEAF					
N* leaf	1 1/16"	11"	44⅜"	EO	1
O rails	¾"	2½"	11"	O	2
P cleat	¾"	¾"	10"	O	2

*Initially cut parts marked with an * oversized. Then, trim each to finished size according to the how-to instructions.

Material Key: LO–laminated oak, O–oak, EO–edge-joined oak

Supplies: 4–¼ × 1¾" flathead machine screws, #8 × ¾" roundhead wood screws, #8 × 1¼" flathead wood screws, #8 × 1½" flathead wood screws, #8 × ⅝" roundhead screws, waxed paper, stain, finish.

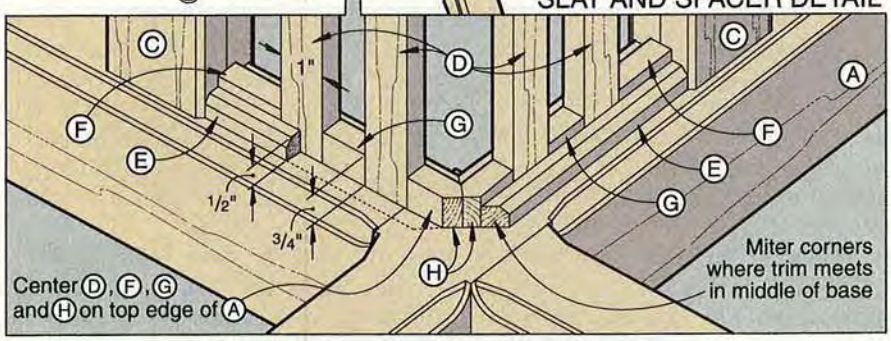

1 1/16 x 9 1/4 x 96" Oak (three 9 1/4"-wide boards required for J)

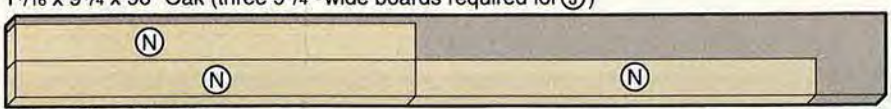

1 1/16 x 5 1/2 x 96" Oak

Note: Cut splines from 1/4" plywood

3 Cut the slats (D) to size.
4 To form the slat trim (E), cut a piece of stock to ⅜×½×48″. Cut or rout a ⅛″ chamfer along one edge of the 48″-long strip. See the Exploded View drawing and accompanying details for reference.
5 Cut the spacers (F, G, H) to size. (For safety, we made the double miter-cuts on the ends of a long piece of stock for parts H, miter-cutting the parts on a hand miter box. Then, we crosscut the H's to length from the ends of the long stock.)
6 Dry-fit the slat assembly (D, E, F, G, H) between the feet and cross members to check the fit. Then, glue and clamp the pieces in place where shown on the Slat and Spacer detail accompanying the Exploded View drawing.
7 Next, cut the table-slide supports (I) to size. Position and clamp them on the top of the cross members where shown on the Exploded View drawing. Using the previously drilled ¼″ mounting holes in the cross members (B) as guides, mark the centerpoints and drill the 5/16″ mounting holes and T-nut depressions in each support. See the Screw detail accompanying the Base drawing for reference.

Now, edge-join narrower stock for the tabletop

1 To form the two halves (J) for the tabletop, cut 1 1/16″-thick stock to the sizes listed on the Tabletop Assembly drawing. Only one half is shown, so be sure to cut two pieces for every one shown.
2 Lay out the pieces for the best grain match. Mark the edges that will receive the splines. See the Tabletop Assembly for location.
3 Fit your router with a ¼″ slotting cutter. Rout ¼″ slots centered along the marked edges of the tabletop pieces, stopping 1¾″ from the ends. See the Spline detail accompanying the Tabletop Assembly drawing for reference.

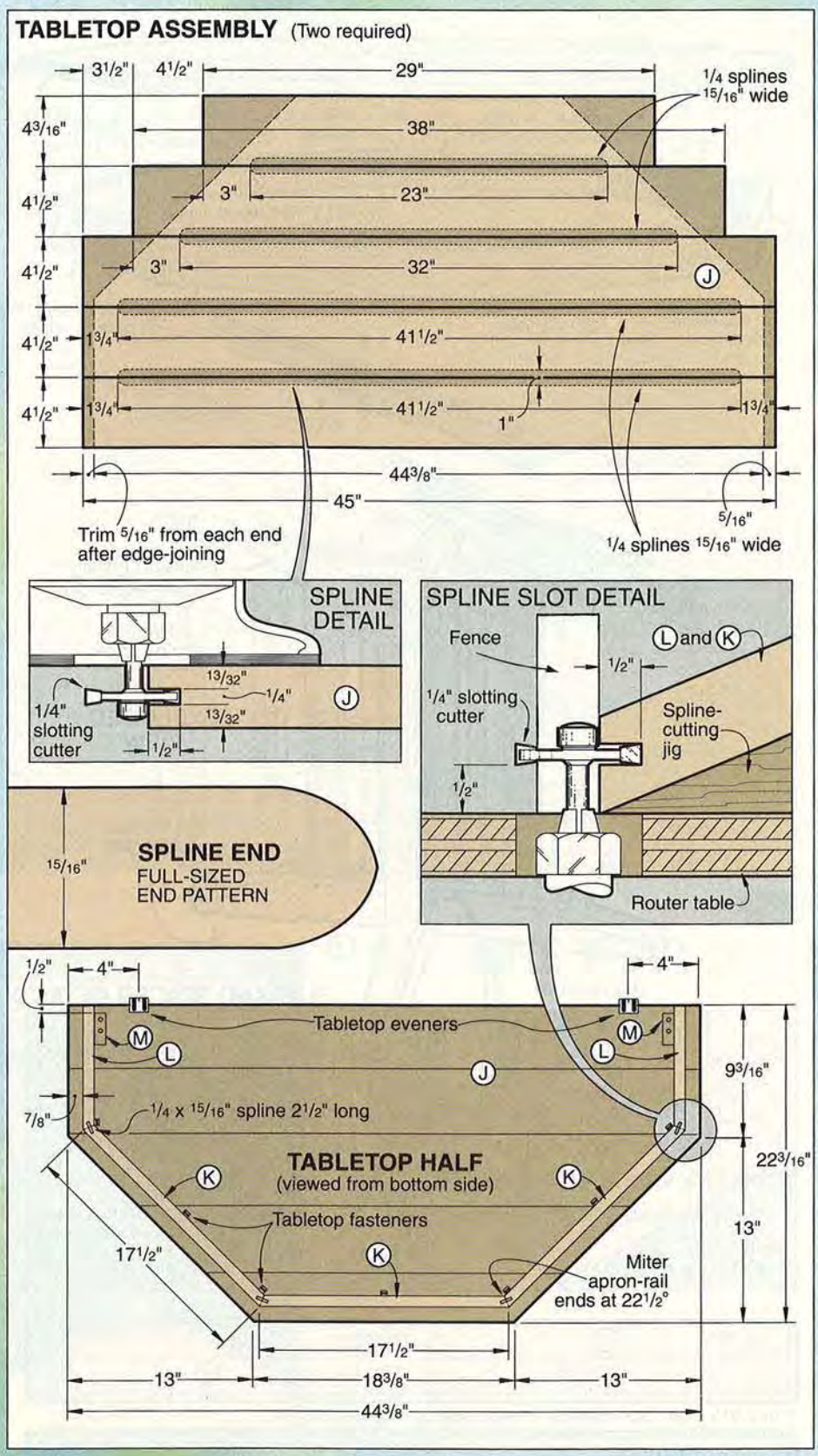

SPLINE-CUTTING JIG

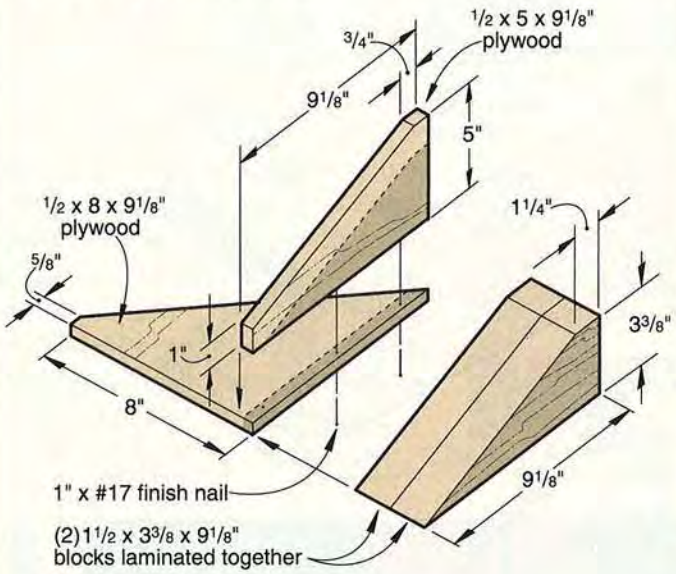

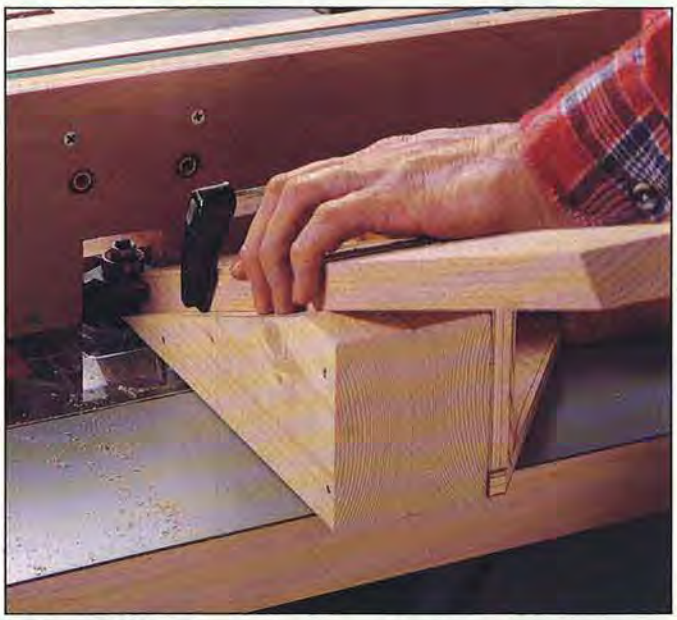

Using the spline-cutting jig for support, rout slots across the ends of the apron rails.

4 From ¼" stock (we used plywood), cut 15⁄16"-wide splines to the lengths listed on the Tabletop Assembly drawing. (Before cutting, make sure the ¼" plywood fits snugly in the ¼" slots. We've found some ¼" plywood is undersized, making for a sloppy fit.) Now, cut or sand the ends of each spline to the shape shown on the full-sized Spline End pattern.

5 Glue, spline, and clamp one tabletop half together, checking that the top remains flat. Repeat for the other tabletop half. Remove excess glue.

6 Mark the layout lines, and cut the tabletop halves to shape. See the Tabletop Assembly and Tabletop Half drawings for dimensions.

Next, add the apron rails and hardware

1 Cut the apron rails (K, L) to the sizes listed in the Bill of Materials. Miter the ends at the angle shown on the Tabletop Half drawing.

2 Cut a ⅛" groove ¼" deep along the top inside edge of each apron rail where shown on the Tabletop Fastener detail accompanying the Exploded View drawing.

3 Rout a ¼" chamfer along the bottom edges of each apron rail.

4 Build the Spline-Cutting Jig shown *above left*.

5 Raise the bottom edge of the slotting cutter ½"?? above the top surface of the router table. As shown in the photo *above right*, rout a slot across both ends of each long apron rail (K) and across the mitered end of each short apron rail (L).

6 Lay a blanket on top of your workbench. Then, position the tabletop halves upside down and edge to edge with the ends aligned. Attach the tabletop eveners where shown on the Tabletop Half drawing. The eveners align with each other on each half.

7 Position the apron rails (K, L) on the tabletop halves, positioning the square-cut ends of the short apron rails (L) with the inside edge of the tabletop half. To keep glue off the tabletop bottom, slide waxed paper between the apron rails and tabletop. Glue and spline the apron rails together. Use masking tape to hold the mitered-splined joints tight and the pieces in place until the glue has dried. (We used large handscrew clamps to temporarily clamp the pieces to the tabletop bottom until the glue dried.) Later, remove the clamps, waxed paper, and masking tape.

8 Carefully position the apron assembly on the tabletop bottom. Slide one end of each tabletop fastener into the ⅛" groove in the apron rails, and screw the opposite end of the fastener to the tabletop bottom.

9 With the ends flush and the slides parallel to each other, attach the slides to the base supports where shown on the Exploded View drawing.

10 With the tabletop still upside down, position the base (also upside down) on the bottom side of the tabletop. Position the slides so that they are perpendicular to the joint line of the tabletop halves. Drill mounting holes, and fasten the slides to the tabletop.

Continued

Build a leaf (or two, or three)

1 Edge-join stock for each 11"-wide leaf (N), cutting the pieces 1" extra in length. Crosscut the ends square, trimming, the leaves to the same length as the tabletop. (To ensure the correct length, we positioned our leaves next to the tabletop halves to mark the cutoff lines.)

2 Turn the table right side up, and position the leaves on the slides between the tabletop halves (J). Attach the tabletop eveners to the leaves, mating them to the eveners already attached to the tabletop halves. Keep the leaves in place for routing in the next step.

3 Using the same raised-panel bit used earlier to rout the feet, rout the top edges of the tabletop and the ends of the leaf.

4 Cut the leaf apron rails (O) to size, and chamfer the bottom outside edge of each.

5 Cut the apron-rail cleats (P) to size. Drill mounting holes through them to the sizes stated on the Leaf drawing. Fasten the cleats to the apron rails, and then attach the apron rail/cleats to the bottom of the leaf, making sure the leaf apron rails align with the tabletop apron rails.

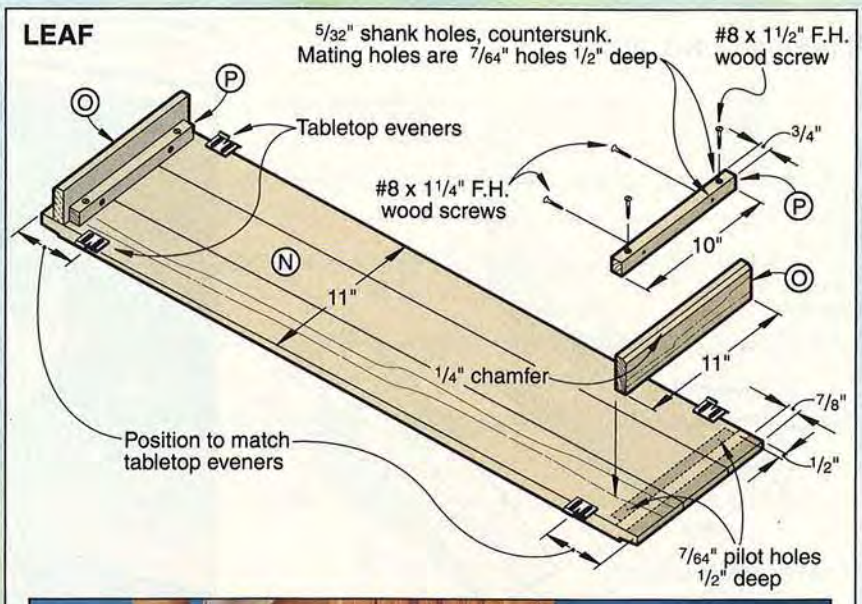

Attach the metal slides to the slide supports (I) and then secure them to the bottom of the tabletop halves.

Finishing Up

1 With the leaves in place, sand the top of the tabletop assembly flush and smooth.

2 Remove the slides from the tabletop and base. (To maintain alignment between the tabletop and leaves, we didn't remove the eveners.) Finish-sand the base, tabletop, and leaves.

3 Stain the pieces (we used WOOD-KOTE gelled Danish walnut stain). Apply the finish. (We applied Minwax fast-drying clear-gloss polyurethane, followed by a final coat of Minwax fast-drying clear semi-gloss polyurethane.) To help prevent warping later due to moisture absorption from the atmosphere, add as many coats of finish to the bottom of the tabletop and leaf as you do to the top.

4 Reattach the slides to the supports and tabletop halves as shown in the photo *above*.

5 Nail the floor glides to the bottom of the feet.

Produced by Marlen Kemmet
Project Design: James R. Downing
Photographs: John Hetherington
Illustrations: Kim Downing

Buying Guide

• **Table hardware.** One pair of ball-bearing steel slides, 2" high by 40" long; one pack (10 pair) of tabletop eveners; two packs of tabletop fasteners (10/pack); one pack of ¼"-20 T-nuts (10/pack); 4–1 1/16"-diameter floor glides. Kit no. 85812, $49.95 ppd. The Woodworkers' Store, 21801 Industrial Blvd., Rogers, MN 55374-9514. Or call 612/428-3200 to order.

Print this article

HOW TO LEVEL GLUED-UP STOCK

WITH A BELT SANDER

No matter how hard you try, it's nearly impossible to edge-join boards and have the finished product come out perfectly flat. Here's a quick, systematic approach to leveling glue-ups that removes as little material as necessary.

1 First, you'll need a straightedge that's at least as long as the width of your glue-up. Lay the straightedge across the width of the workpiece (perpendicular to the joint lines) about 1" from the front edge of the workpiece. Position yourself at eye level with the surface of the workpiece, and sight along the length of the straightedge. Make heavy pencil marks along the high spots (wherever light does not show below the straightedge) as shown *below*. To quickly find the high spots, it also helps to rock the straightedge.

2 To mark the remaining high areas, repeat this procedure down the length of the workpiece, moving the straightedge in 3" increments as shown in the drawing *below*.

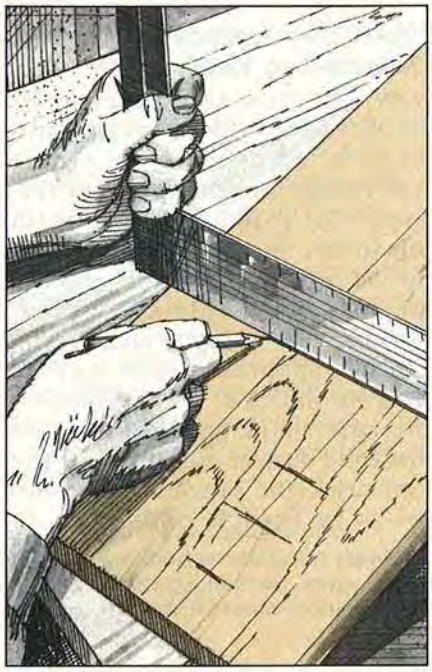

3 With a belt sander and a 60- to 100-grit sanding belt, sand the marked areas until the pencil lines disappear. Move the belt sander forward and back along the grain, and lift it off the surface completely to move to the next high area.

4 Repeat Steps 1 through 3 until you've flattened the panel (three or four times through these steps usually does it). As the glue-up becomes more level, your pencil marks should become longer as shown *below*. For the last pass over the workpiece, switch to a 120- to 150-grit belt. With a finish sander, smooth the entire surface.

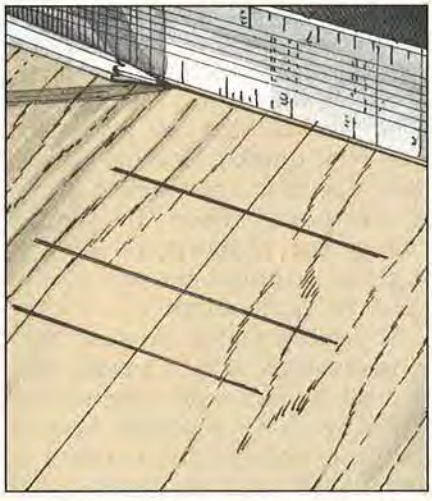

Illustrations: Jim Stevenson

Sal Marino's FRICTION-FILM FINISH

This Brooklyn-based woodworking expert puts a new spin on a classical finishing technique—French polishing. Here, he tells you how to get exactly the same high-gloss look on your turnings in a fraction of the time that it took the old masters.

Print this article

The French polishing commonly found on European classical furniture produces a glasslike surface. But the process takes a long time to learn and apply.

Brooklyn craftsman Sal Marino briefly explains: "The old way, French polishing was done with shellac, alcohol, pumice powder, and elbow grease. The whole idea was to build up a very beautiful shiny finish by rubbing on coats of alcohol-thinned shellac with a pad made of wool and linen.

"A finisher continually moved the pad soaked in alcohol and shellac and peppered with pumice across the piece, pushing down as he went," Sal goes on. "The alcohol blew off [evaporated] very quickly, leaving a thin film of shellac and pumice down in the pores. Then, he would change the proportion—increasing the shellac—as the finish built. It's quite an art."

According to Sal, modern padding lacquers, which blend shellac and lacquer with solvents and retarders, have replaced French polishing because they're easier to work with. And his *friction-film* finish for woodturnings is no exception to this advancement.

"It's very similar to French polishing as practiced by the masters because you apply pressure to the spinning piece," Sal says. "But it results in a beautiful, high-gloss, dust-free finish—just like French polishing—in a fraction of the time it would otherwise take."

Heat, the essence of a friction-film finish

How can even an inexperienced woodworker achieve such results when it takes months to perfect real French polishing? "Two reasons," Sal explains. "First, with this finish, the film actually builds up on the surface. And second, the film isn't achieved conventionally, like by spraying, but by pressure application with a cloth. As you increase the application pressure, it generates heat that dries the surface film. And as the film dries, the pressure burnishes it—as in French polishing—to make the surface really pop. That's also why it works best on turned objects—the finish requires the heat from the friction of pressure on the spinning object."

How to work up to a faux French polish

Sal admits that one of the secrets to a high-gloss, friction finish lies in the surface preparation. "If you get a real good surface from the [lathe] tool, then you don't have to do much sanding," he says.

Actually, the sanding Sal does takes little more than a few minutes because he works on a spinning vessel mounted in the lathe. Here's how he starts out:

"What I do is sand with progressively finer papers—120, 220, 320, 400, 600, then jump to 1200. They're all dry abrasive, and applied at the same speed the piece was finish-turned at," says Sal. "The 120- and 220-grit are cloth-backed garnet papers so they

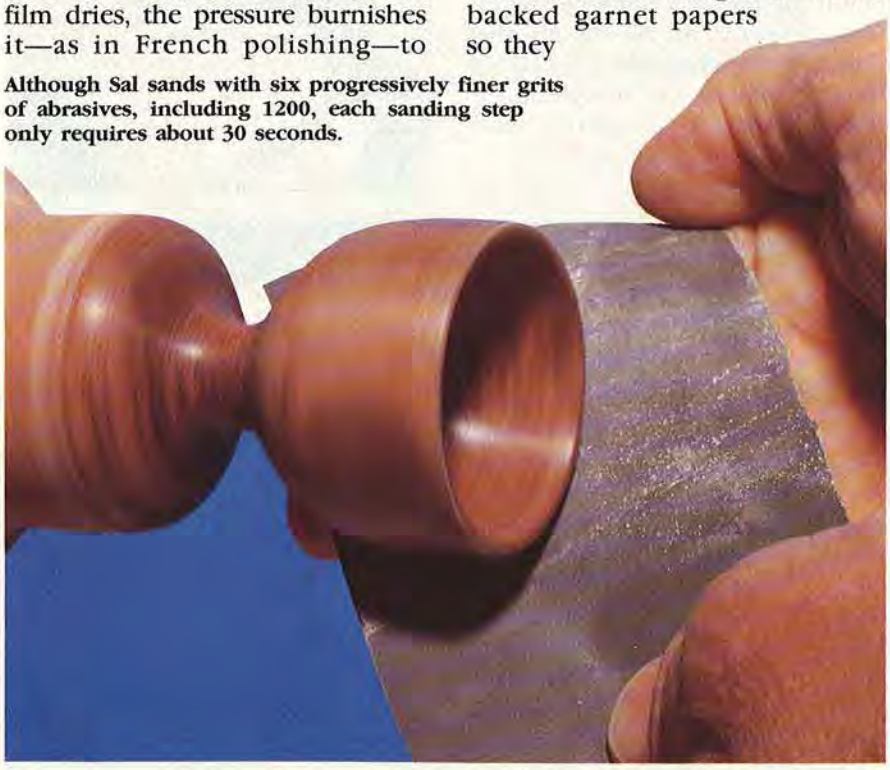

Although Sal sands with six progressively finer grits of abrasives, including 1200, each sanding step only requires about 30 seconds.

FOR TURNED OBJECTS

don't heat up my hand. When I get to the 320-grit and above, I use a wet/dry paper, but without wetting it."

But how does Sal know when to switch to a finer grit? "I have a lamp mounted above the lathe that shines down on the work at a slight angle," he explains. "So, after I sand—and that's mostly done with the 120-grit to establish the scratch pattern—I wipe off the dust. Then I look at it under the light. As the piece spins, the light reveals any deeper scratches—they show up as little shadows. I sand until it has no shadows and the surface looks uniform [see photo *below left*], then I move on to the next higher grit."

Sal explains why he does all that sanding: "Because it's impossible to sand with the grain on a spinning piece, you get scratches. But I develop a scratch pattern that's almost invisible."

Photographs: John Hetherington; Bob Stites

Finishing under pressure

After sanding, Sal wipes down the still-spinning piece with a cloth dampened in acetone or naphtha. "That's important with some of the oily, exotic woods," he notes.

Now, Sal's ready to apply Woodturners Finish (manufactured by Behlens, at about $12 a pint). "Woodturners Finish is a modern padding lacquer formulated specifically for the lathe," he says. "And I first apply it liberally to the piece with a pad of fine, 100-percent cotton cheesecloth, [or all-cotton T-shirt] while it spins at about 600 rpm.—that's not fast enough for the finish to set up too quickly."

Next, Sal begins his polishing. "I keep the cloth moving across the piece [as shown *below right*] until I begin to feel that most of the finish has been laid down—the surface starts to feel tacky," he advises. "Then, I start applying a little pressure with the pad. After about 30 seconds, the finish brightens right up. A few more passes with the cloth and that's it. If the gloss seems too high, knock it back with super-fine steel wool after it cures."

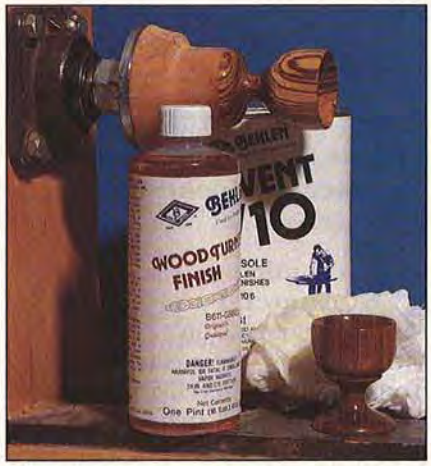

Burnishing a finish gives you a deep rich gloss, as on these egg cups of zebrawood and cordia.

Light pressure on the turning wood with the pad quickly dries the finish and burnishes it. This modern version of a French polish takes but a few minutes.

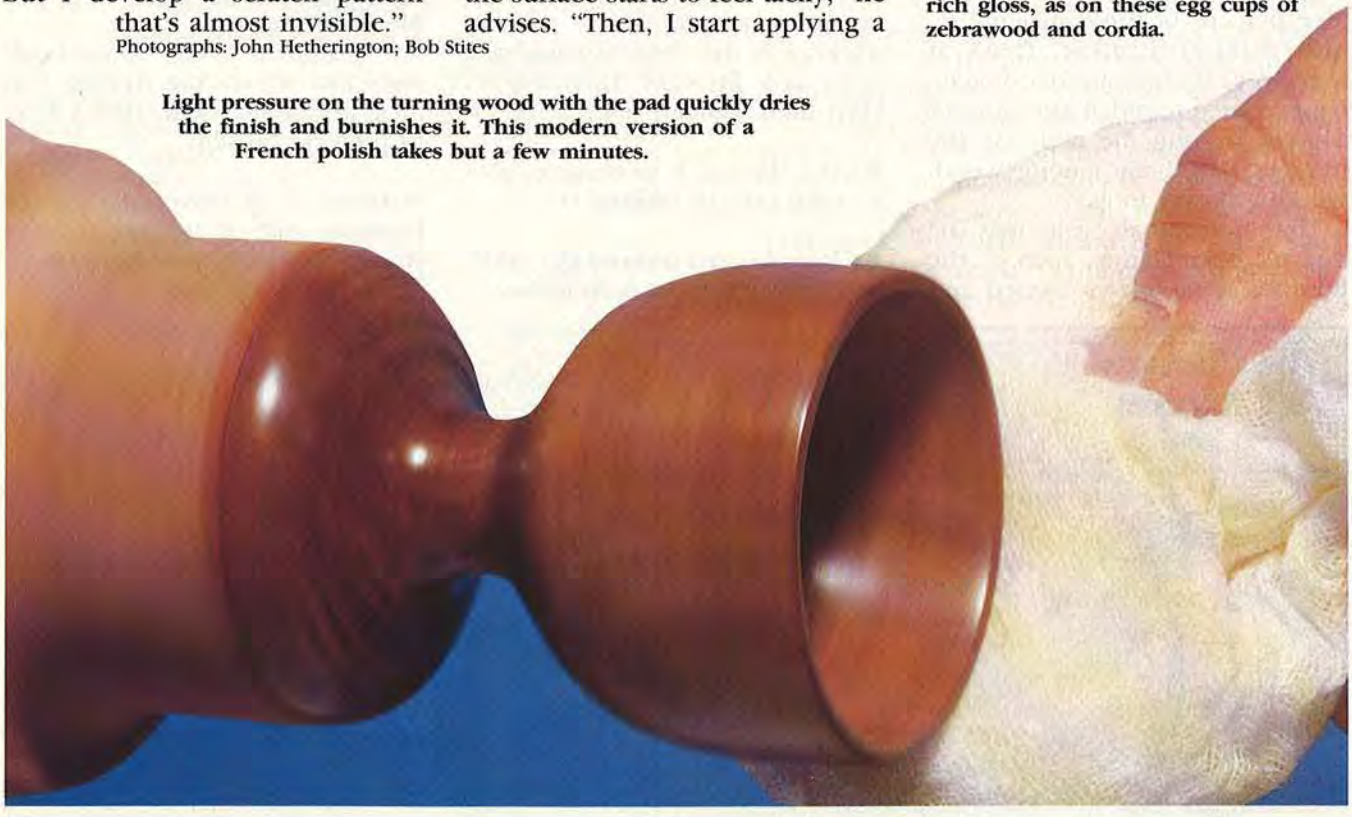

Sound advice for accident-free cutting

SPOTLIGHT ON

Safety statisticians associate the tablesaw with more home-workshop accidents than any other woodworking power tool. But common sense and proven practices, such as those found here, pay big safety dividends.

According to the U.S. Consumer Product Safety Commission's 1991 compilation from their National Electronic Injury Surveillance System (NEISS), injuries treated at emergency rooms said to be associated with table- or benchtop-model saws were estimated at 30,091. Five percent of these patients required hospitalization. That's at least 15 times the number of accidents related to radial-arm saws or routers, making the tablesaw the number one threat among woodworking power tools.

That unfortunate role may be due to other factors, such as the number of tablesaws owned and the amount they're used. But neither of these probable reasons change the statistics.

"I see about 20 people a year who are home woodworkers, and whether or not it was the tablesaw they were using, they all say, 'It happened so fast.' " comments Delwin E. Quenzer, M.D. a leading orthopedic surgeon in Des Moines, Iowa. "And all of them feel remorse because they know the accident was avoidable." See the box, *below*, for his recommendations for prevention.

You also can avert becoming another injury statistic by reading, then practicing, the following rules and techniques of tablesaw use developed by expert woodworkers for the National Safety Council. And don't just be aware of them, make safety a habit.

Sage advice on saw safety

Of course, you'll want to dress appropriately—and safely—when working in the shop, as suggested in the box, *far right.* Then, always heed these general rules:

- *Once the saw is in motion, never reach over or around it.*
- *Clear the area around the tablesaw from scrap, including dust.*
- *Create safe footing by standing on a non-skid mat.*
- *Choose the right saw blade for the job. Don't use a crosscut blade for ripping or vice versa.*

And, to prevent sudden surprises, remember to:

- *Unplug power tools when changing or adjusting blades.*
- *Lower the tablesaw blade below table height when not in use. Always clear off the table with a brush or whisk broom, not with the palm of your hand.*

But, when it comes to specific operations, you'll need to be even more careful. Take ripping, for instance, the most common tablesaw chore.

Ripping: Dangerous at all times

The National Safety Council advises that it's during ripping that most accidents occur. Here's how to protect yourself:

- *Allow 3' of clear area at the working end of the saw (where you stand), plus the length of the stock you're ripping.*

The Doctor's Orders

Dr. Quenzer, whose patients come from industry and the home, cites to all the "risk factors" that contribute to most power-tool accidents, especially tablesaws:

- *Working tired, upset, angry, depressed, or when taking alcohol or prescription drugs.*
- *Carelessness, such as loss of attention during repetitive cuts.*
- *Removing or not using safety equipment, including blade guards and pushsticks.*
- *Not maintaining shop equipment, and using dull, burnt, or gummy blades that cause binding and kickback.*
- *Working with small children around. Or worse, allowing them in the shop in the absence of adult supervision.*

The doctor also believes that accidents happen when people push their machines. "There are limits to what you can expect a piece of equipment to do," he says. He points out, for example, that many tablesaw injuries result from trying to rip too small a piece of wood.

Print this article

TABLESAW SAFETY

• *Before sawing, set the blade teeth to proper height. Blades with a set, or flat ground blades, should extend no more than one tooth-height above the wood. Carbide-tipped blade teeth should extend no more than half of a tooth-height. Raise hollow-ground or planer blades as far as possible above the work to avoid binding.*

• *Keep your hands and body out of line with the cut. Try this to keep your pushing hand out of the blade: Hook the small and ring fingers of the pushing hand over the fence (if without obstruction) to slide with the wood.*

• *Saw with your weight equally balanced on both feet, gripping the stock firmly but not crowding it and the blade. If the work should give, you don't want to be pulled into the blade.*

• *Never rip without the fence nor crosscut without the miter gauge.*

• *When ripping short or narrow stock, rely on a pushstick rather than your hands. If possible, rip narrow strips with the wider stock against the rip fence (or follow the suggestion illustrated,* below*). Thin pieces can catch between the fence and the blade and fly back.*

• *Rip long stock only with adequate support beyond the blade, such as an off-feed table or roller.*

Special cuts mean caution, too:

• *Because stock has a tendency to creep toward the blade during a miter cut, clamp the workpiece in place on the miter gauge.*

• *Crosscut small pieces only with the workpiece safely supported by an auxiliary miter-gauge fence.*

• *Blind-cutting, as in groove-ripping or dadoing, is dangerous. Always clamp stops to auxiliary fences to regulate the beginning and end of a cut.*

• *Never make a cut that you have the slightest doubt about.*

DRESS FOR SUCCESS

Fashion doesn't dictate your woodworking attire, safety does. The wrong type of clothes *can* cause accidents. Be comfortable, but heed the following advice:

• ***Protect your eyes with goggles or safety glasses equipped with side shields.***

• ***Wear hearing protection such as muffs or plugs.***

• ***Roll long sleeves above the elbow or wear a short-sleeved shirt.***

• ***Remove all jewelry, such as wristwatches, bracelets, or cumbersome rings.***

• ***Prevent slipping by wearing shoes with rubber soles.***

How to rip thin pieces safely

Jim Boelling, *WOOD*® magazine's project builder, regularly rips stock into thin pieces as shown *below*. "The large pushblock enables you to hold the stock solidly against the table as it goes through and exits the blade. It's great for repetitive cuts."

According to Jim, the secret to success is to first dimension the stock to desired thickness, *then* rip it to width. "Be sure you cut the notch in the bottom of the solid pushblock to exactly match your stock's thickness," he adds. "That means making a new pushblock for each thickness of wood you want to rip, but it's worth it. And even without the blade guard, it's a safe operation."

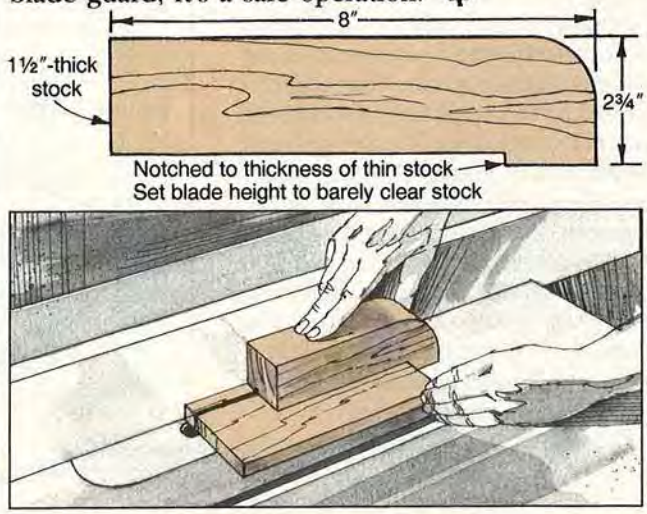

Written by Peter J. Stephano Illustrations: Mike Henry; Jim Stevenson

A BEGINNER'S PRIMER ON TURNING

If you're missing out on the excitement of woodturning just because the tools confuse you, read on. After you finish our short course in turning tools, you'll know exactly what you need to take part in the pleasure of turning.

WHAT'S YOUR TURNING PLEASURE?

To decide which tools you need, first consider what you intend to make on the lathe. Do you relish the thought of turning only bowls and more bowls? Or are you set on shaping ornate table legs and candlesticks? Maybe both?

Faceplate turnings, such as bowls, call for different tools than spindle work, such as table legs and candlesticks. That's because of the wood grain direction. In faceplate turning, the grain of the turning stock runs crosswise to the stock's rotation on the lathe. For spindle turning, it runs lengthwise, shown *right*.

Scrapers, for instance, cut cleanly across the grain—great for faceplate work—but can tear out the surface when used along the grain—not so good for spindle work. Some tools, though, adapt to either style of work. By selecting tools for your type of turning, you'll avoid lots of frustration.

Don't worry if you're not quite ready to settle on one brand of turning. If you buy tools for both, you won't miss out on anything.

WHAT ARE ALL THOSE TOOLS FOR?

Basic turning tools fall into four broad categories: gouges, skew chisels, scrapers, and parting tools. Refer to our chart, *below,* as we take a look at the tools that you'll find most useful.

QUICK GUIDE TO TURNING TOOLS

TOOL		USE FOR*		COMMON SIZES	PREFERRED MAT'L.**	PRICE RANGE***
		FACEPLATE	SPINDLE			
GOUGES	Spindle	O	+	⅛–¾"	HSS,HCS	$20–30
	Roughing	—	+	¾"–1¼"	HSS,HCS	$35–40
	Bowl	+	O	½–¾"	HSS	$30–75
SKEW CHISELS	(standard or oval)	O	+	¼–1"	HSS	$20–30
SCRAPERS	(all shapes)	+	O	½–1½"	HSS	$20–60
PARTING TOOLS	Diamond-section	+	+	3/16"	HSS	$35–40
	Other styles	O	O	⅛–⅜"	HSS	$20–45

* + = Best use; O = Other use; — = Not Suitable

** HSS = High-speed steel; HCS = High-carbon steel (Listed in order of preference)

*** HSS tools with handles

FACEPLATE VS. SPINDLE TURNING

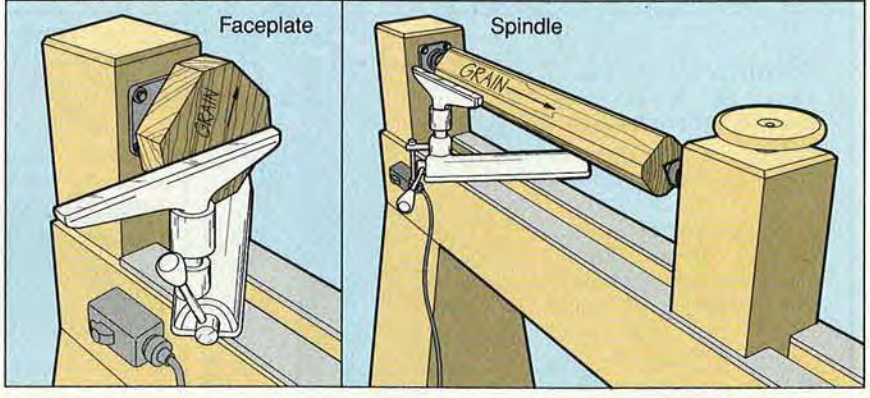

Print this article

TOOLS

GOUGES

• **Spindle gouge** As a group, gouges are the most versatile tools in turning, and the spindle gouge leads the pack in adaptability. A shallow gouge designed for straight or curved cutting along the grain, it also does a creditable job cutting outside profiles on faceplate turnings. It's less suited to hollowing out bowls on the faceplate, though.

By grinding the tip to different bevel angles, you can suit the gouge solely to spindle use or to combination spindle and faceplate use. (See "How to Sharpen Turning and Carving Tools," *WOOD*® magazine, June 1992.)

Spindle gouges come in sizes from ⅛" to ¾". The size indicates the diameter of the steel-rod stock from which the gouge is made.

• **Roughing gouge** Used only for spindle work, the deep, square-shouldered roughing gouge makes short work of shaving the corners from a turning square to form a cylinder. Round down the stock by holding the flute (the opening) of the gouge straight up, and then lay the gouge on its side for truing.

You can shape shallow curves on spindle turnings with the roughing gouge, but its corners make it dangerous for faceplate work. Available in ¾" or 1¼" flute widths, this tool comes in handy for spindle turners who routinely start with square stock.

Gouges are the most versatile of turning tools. In fact, you could turn a spindle or a bowl with no other tool than a gouge. The flute depth, bevel angle, and end shape distinguish the three different types. Shown from left, the roughing gouge, used to round square stock for spindle turning, two spindle gouges, and two bowl gouges.

• **Bowl gouge** Distinguished from the spindle gouge by a deeper flute and a shorter bevel, the bowl gouge is basic equipment for faceplate work. With this one tool, you can rough out a bowl and finish it, both inside and out. It also can take the place of a roughing gouge for spindle work with some success.

Turners often push the cutting end of a bowl gouge well past the tool rest to reach deep into a bowl. Toolmakers compensate for this with extra heft in bowl gouges. Some offer heavier (called long and strong) versions, too.

Bowl gouge sizes, from ¼" to ¾", are measured from the inside of the flute on one side to the outside of the gouge on the other. The size plus ⅛" equals the diameter of the gouge.

Scrapers, mostly used in faceplate turning, come in a variety of sizes, shapes and styles. Typical scrapers include, from left, roundnose, diamond side-cutting, straight, half-round, skew, and domed. Thicker, heavier scraper blades provide a smoother turned surface by reducing chattering.

SKEW CHISELS

• **Standard skew** The skew chisel, so called because its cutting edge angles across the end of the blade, handles varied spindle-turning chores. Use the skew for end-grain trimming, shoulder cutting, beading, grooving, and surfacing. Wielded properly, a sharp skew planes a nearly perfect surface.

It's that "properly" that escapes a lot of beginning (and not-so-beginning) turners; the tool has a reputation for being tricky to manipulate. Since the skew isn't often flat against the tool rest, a violent twisting reaction (and, usually, loss of a chunk from the turning) results when the work catches the cutting edge. And, the blade corner doesn't slide smoothly across the tool rest.

Continued

TURNING TOOLS

• **Oval skew** To temper the touchy skew, English toolmaker Robert Sorby Ltd. developed the oval skew chisel. The oval cross-section lessens twisting and tear-out by providing broader support for the tool.

The rounded blade also slides across the tool rest more easily than the traditional rectangular skew blade. The oval blade does retain one narrow flat edge, which is useful for making shoulders and marking.

Standard and oval-blade skews are commonly available in sizes from ½" to 1¼" in ¼" increments. The size refers to blade width.

Skew-fearing turners have another option: The Stabilax Skew Tamer. This cylindrical steel collar clamps onto a regular rectangular skew, adding a round section just behind the cutting edge.

***Above,* compare the standard skew's flat sides and sharp corners to the oval skew's blade. Many woodturners find the oval skew easier to handle. Skews, like all turning tools, must be sharp.**

SCRAPERS

For a fine surface on a faceplate turning, you can't beat a scraper. With the blade flat against the tool rest, the burr raised by grinding the blunt end (*below*) shaves the wood. A scraped surface often looks polished.

Use scrapers to even out curves in the turning and erase the ripples left by the gouge. You'll rely less on scrapers as you become more proficient with gouges.

Spindle turners use scrapers judiciously: mainly for hollowing out end-grain openings in goblets, weed pots, and other center-work vessels. While scrapers work great in the end grain, they're likely to leave a rough, torn surface on the side of a spindle turning.

You'll find scrapers with round, half-round (left or right), square, skew (left or right), and dome tips in addition to side-cutting scrapers (the ones with a notch cut out of the side). Sizes range from ½" to 1½".

Thicker scrapers vibrate and chatter less in use, leading to a better finished surface. (Scrapers designated *long and strong* may be as much as ½" thick.)

PARTING TOOLS

For deep, narrow, straight cuts, count on the parting tool. With it, you'll separate the workpiece from the waste material to remove a turning from the lathe.

But you'll get more out of it than that. Want to delineate sections or establish diameters on your turning? Cut in with a parting tool to make a narrow, square groove that you can measure with calipers. You'll even find a special sizing gauge made to fit one style of parting tool.

Grab a parting tool to create decorative grooves and flats, trim end grain, or divide a turning into parts—a box and lid, for instance. Laid on its side, the parting tool inscribes fine accent lines.

The diamond-section parting tool (see illustration *below*) ranks as the best all-around choice. The shape leaves side clearance that reduces drag and heat build-up.

The fluted parting tool, with a hollow-ground edge on a tapered blade, and combination beading and parting tools come in handy in special cases. But buy these only in addition to a diamond-section tool, not instead of one.

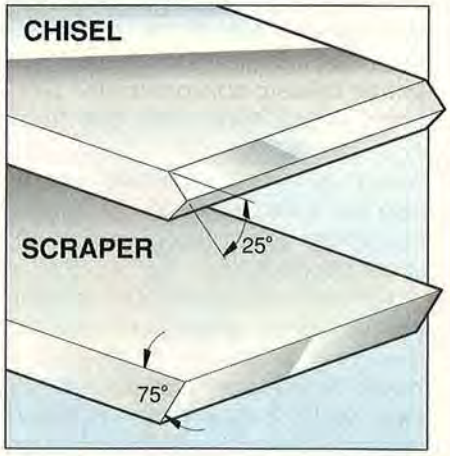

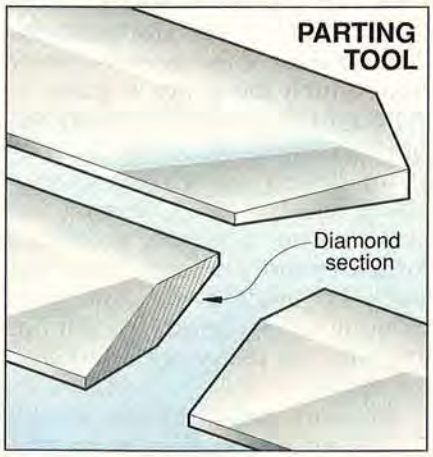

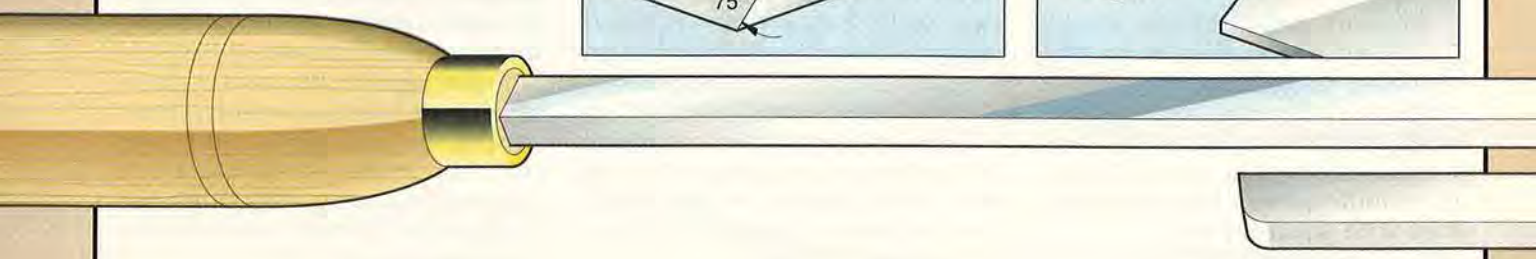

WHAT'S THE DEAL ON STEEL?

For many tools, you can choose between carbon steel or high-speed steel (HSS). HSS tools cost more, but offer a distinct advantage: They hold an edge longer.

The term high-speed steel refers to steel that has been mixed—or alloyed—with other elements, creating a material that holds a sharp edge under the heat and pressure of machine cutting. HSS embraces a variety of tool-steel alloys. Not all of them are alike; toolmakers match an alloy's properties to those desired for a tool.

M2 is one often specified for turning tools. According to Bill Stasko of Crucible Steel Co., makers of tool steel, M2 combines tungsten, molybdenum, vanadium, and chromium with high-carbon steel. "The carbides that form (in the alloying) with tungsten, molybdenum, and vanadium give the steel abrasion (wear) resistance," he explains.

That, combined with the steel's ability to maintain its temper at temperatures that could ruin a carbon steel edge, means you won't have to sharpen an M2 HSS tool as often as a carbon steel one. And when you do sharpen the HSS tool, you're less likely to overheat it against your grinding wheel and spoil the tool's temper.

Now, here's the hard part

A Rockwell hardness number, usually in the C60–65 range for turning tools, indicates the steel's penetration resistance. But hardness doesn't necessarily translate into edge-holding ability.

"An HSS tool hardened to Rockwell C62 will stay sharp longer than a carbon-steel tool of the same hardness," Crucible Steel's Stasko explains. Even HSS tools may wear at different rates, due to differences in the alloys, he notes.

HSS should be your first choice for most turning tools. For bowl gouges, scrapers, and parting tools, make it your only choice.

OKAY, WHAT DO I REALLY NEED?

FACEPLATE TURNING

BASIC SET

Bowl gouges, ¼" and ½"
Round-nose scraper, ½"
Diamond-section parting tool, 3⁄16"

ADD-ONS

Bowl gouges, ⅜" and ⅝"
Side-cutting scraper, round nose
Dome scraper, ¾"

SPINDLE TURNING

BASIC SET

Roughing gouge, ¾"
Spindle gouges, ¼", ⅜", and ½"
Skew chisels, ½" and 1"
Round-nose scraper, ½"
Diamond-section parting tool, 3⁄16"

ADD-ONS

Roughing gouge, 1¼"

COMBINATION SET

BASIC SET

Roughing gouge, ¾"
Bowl gouges, ¼" and ½"
Spindle gouges, ¼", ⅜", and ½"
Round-nose scraper, ½"
Skew chisels, ½" and 1"
Diamond-section parting tool, 3⁄16"

ADD-ONS

As listed *left*.

WHAT'S IT GOING TO COST?

Expect to pay $20–30 per tool for the spindle gouges, oval skew chisels, and some scrapers in high-speed steel ($15–20 when available in carbon steel). Bowl gouges start at about $30 and go up to $75 in HSS. A diamond-section HSS parting tool and a ¾" roughing gouge will each cost $35–40. Heavy-duty HSS scrapers go for $40–60 per tool. Prices are for tools with handles.

If you want to reduce your start-up investment, look for specially priced sets. Casual turners might find carbon-steel economy tools suitable.

Where to buy them

Most woodworking stores sell woodturning tools. You also can buy them from mail-order suppliers if your local dealer doesn't stock them. Some sources are:

Craft Supplies USA, 1287 E. 1120 S., Provo, UT 84601. Call 801/373-0917 for catalog.

Garrett Wade Co., 161 Avenue of the Americas, New York, NY 10013. 800/221-2942 for catalog.

Woodcraft, 210 Wood County Industrial Park, P.O. Box 1686, Parkersburg, WV 26102-1686. Call 800/542-9115 for catalog.

Written by Larry Johnston Graphic Design: Perry McFarlin
Photographs: Wm. Hopkins Illustrations: Kim Downing

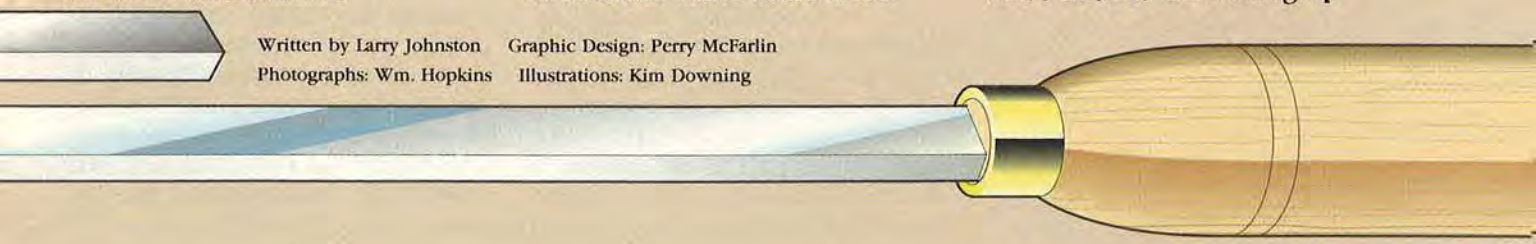

A PICTURE-BOOK

This photo frame speaks volumes

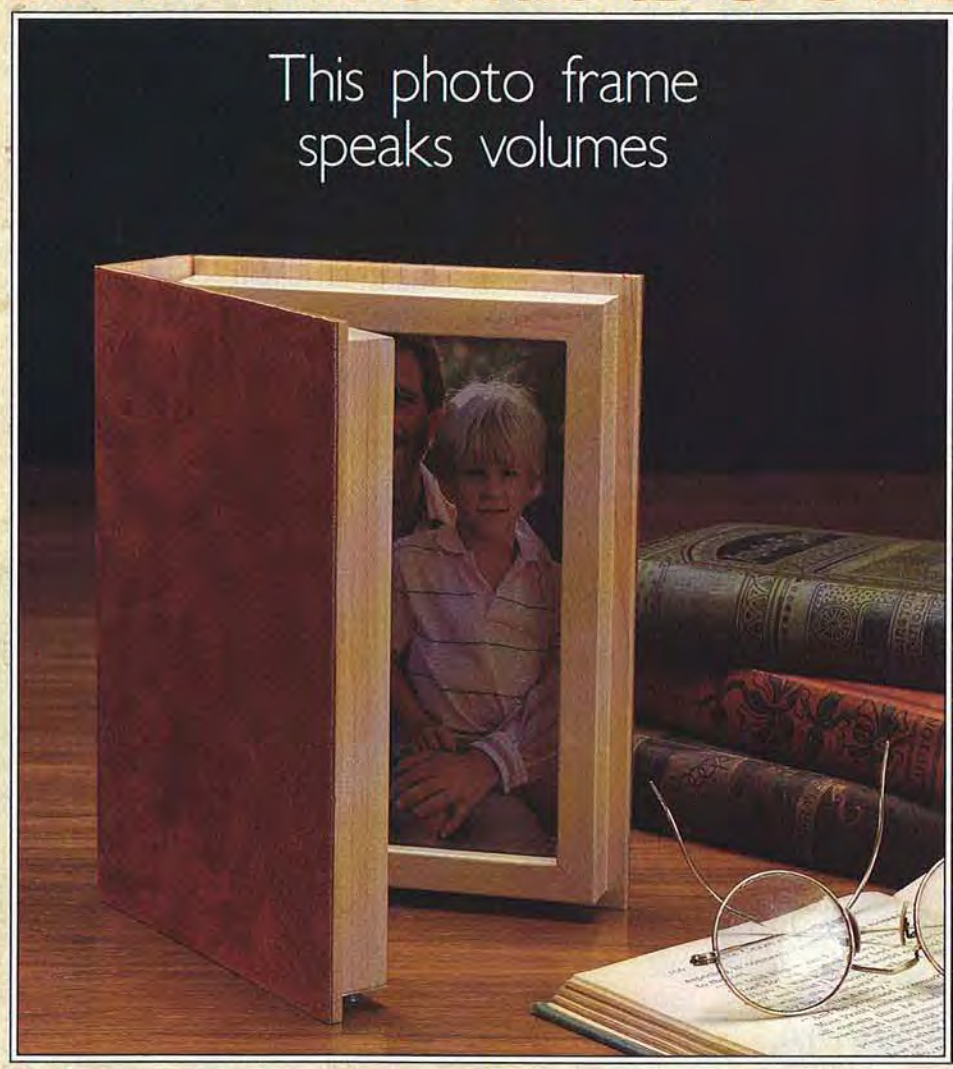

When they see this great frame, family and friends will figure you wrote the book on setting up a great photo display. Our frame for two photos, resembling a leather-bound book, goes together so easily that you just might want to build a library of them.

Print this article

Cut two backs (A) to the size shown in the Bill of Materials. Rout ½" rabbets ¼" deep on both ends and one edge of each, a ¼" rabbet ¼" deep on the other edge.

Cut a ¼" rabbet ½" deep along each edge of a ¾×4×36" board. Then, rip ½" from each edge, forming L-shaped stock. Miter-cut to length for parts B and C.

Lay the backs (A) beside each other, rabbeted sides facing up, narrow rabbets to the inside. Glue two sides (C) and the top (B) into place, *but not the bottom.*

With the glue dry, position each bottom (B), and center a 5/64" hole ⅞" deep ⅛" from each end. Enlarge the holes through part B to ⅛". Countersink them for #4×¾" flathead wood screws.

On the inside edge of each assembly, sand the edges of parts A and C flush. Cut spine (D) to size, and sand to the profile shown.

Finish-sand, rounding over where shown. Apply a clear finish, except to the backs of the frames and the rounded spine.

Fasten the frames and spine together with double-faced tape as shown. Mask the finished wood. Apply adhesive to a 10×15" piece of leather and the frame (we used 3M Spray Trim Adhesive, no. 08074, from an auto-supply

Project Design: David Ashe Photograph: John Hetherington

PROJECT

Bill of Materials

Part	Finished Size T	W	L	Matl.	Qty.
A Back	3/8"	5 3/4"	8"	M	2
B *Top and bottom	3/4"	1/2"	5 1/2"	M	4
C *Sides	3/4"	1/2"	7 1/2"	M	4
D Spine	1/4"	1 3/4"	8"	M	1

*Initially cut these parts oversized. Then, trim each to finished size according to the how-to instructions.
Material Key: M-maple

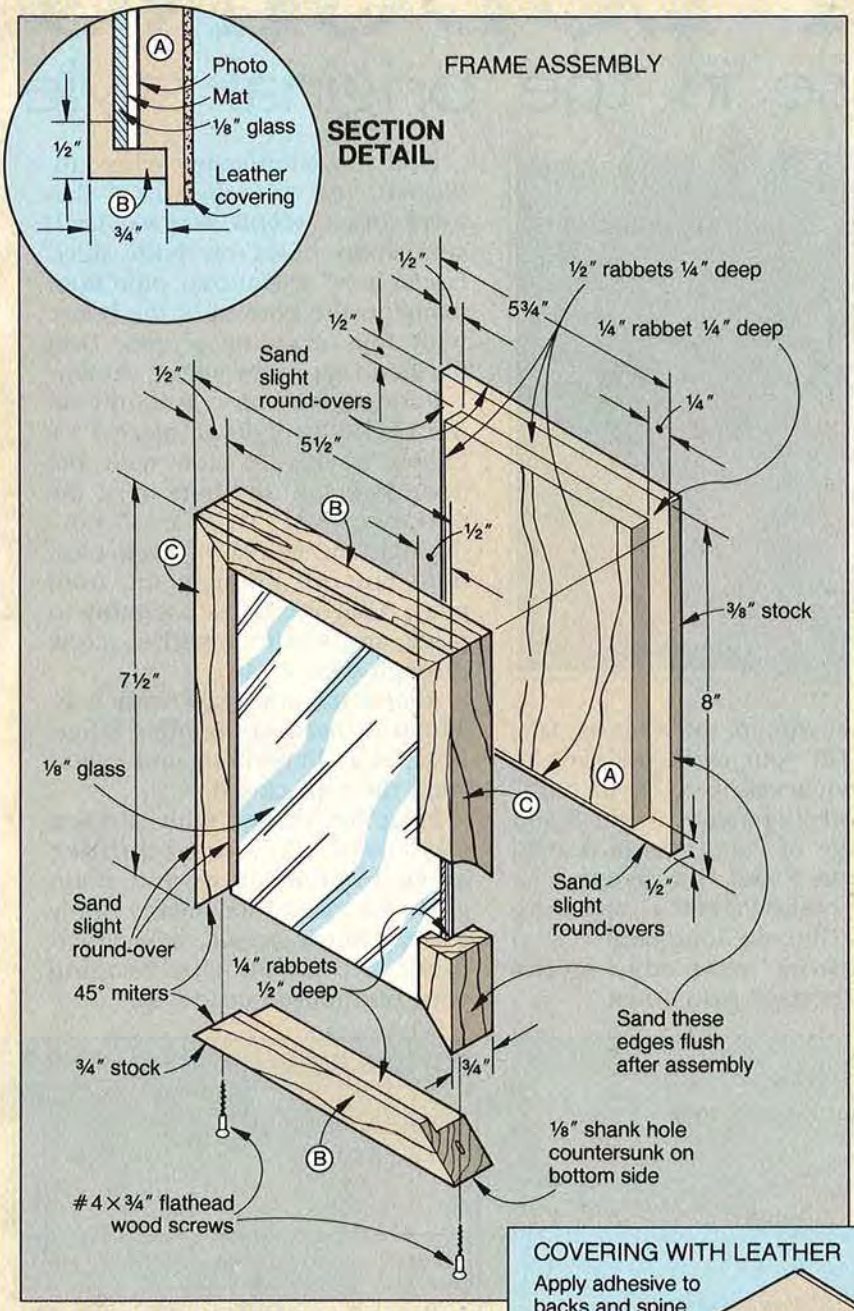

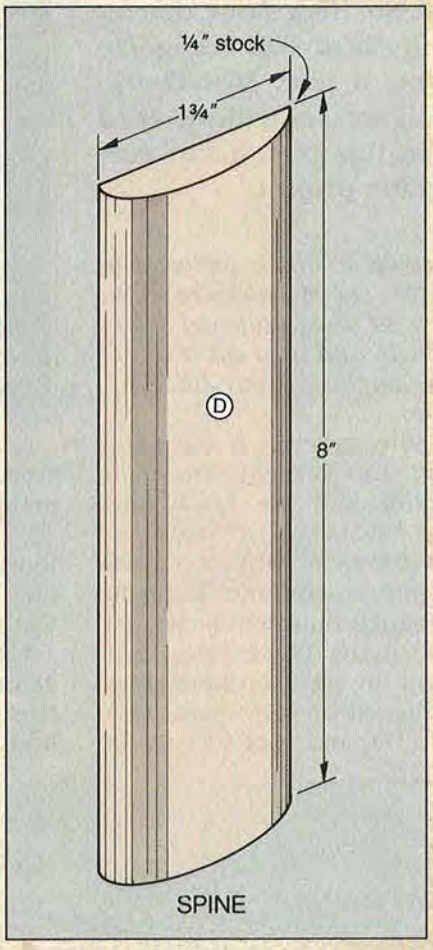

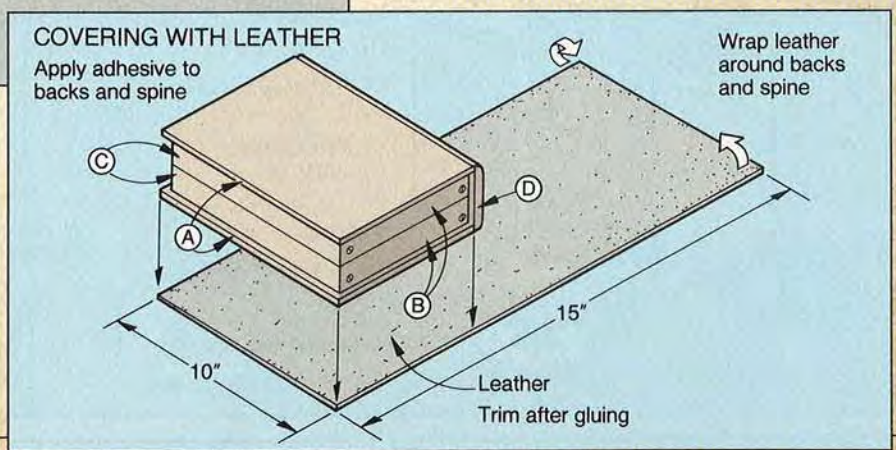

store). Stretch the leather over the frame, working out the wrinkles and rolling it with a rolling pin to ensure a tight bond.

Trim the leather flush to the edges with a sharp utility knife. Now, remove each bottom, and insert your photo, the mat, and a 4 7/8 × 6 7/8" piece of 1/8" glass.

Illustrations: Jamie Downing; Mike Henry

LEAFY LODGING

A birdhouse in the original style

Decorative birdhouses usually look like places people would hang around. So, here's one that almost any bird will recognize as home: a tree. Woodworkers will see something even more in this one: a fun pre-springtime project.

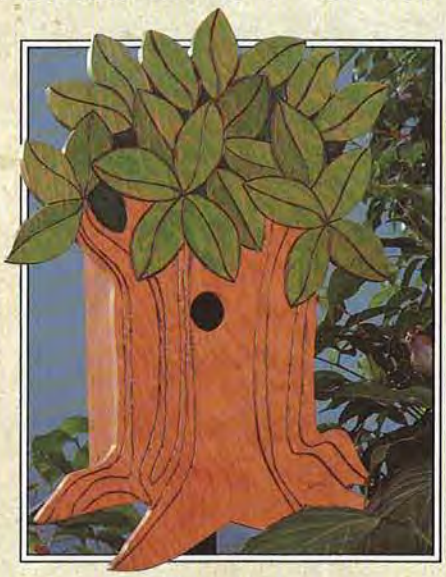

You'll need *½"-thick redwood or cedar for the birdhouse. (We planed a 34"-long redwood 1×12 to ½" thick, and then cut it to 16" and 18" lengths for our stock.)*

Enlarge the pattern on the *opposite page* 150 percent. Trace the red outline and the black lines onto the ½×11¼×16" stock.

Bandsaw or scrollsaw Part A around the red outline. Bore the 1⅛" entrance hole where shown. Woodburn the black lines, and then sand the piece on both sides.

Cut the sides (B), back (C), bottom (D), and roof (E) to the sizes shown on the Cutting Diagram. Tilt your tablesaw blade to 15°, and bevel-rip a ⅞" strip 18" long. Bevel one end of Part B and one edge of Part D, as indicated. Cut cleats F and G to length.

Glue house Parts B, C, and D together. Glue the long cleat (G) to the bottom front edge of the house, beveled side down.

Drill and countersink where indicated, and drive in #6×1" flathead brass wood screws. Drill ventilation holes on both sides. Fasten a ¾" galvanized pipe floor flange to the bottom of the house with four machine screws. Drill the drainage holes where shown.

Position the house assembly on the backside of front piece (A). Center it side to side with the floor 3" below the bottom of the entrance hole. Drill a ⅛" hole through the center of each cleat into, but not through, the front piece. Glue the house assembly in place, and secure it with a screw through each cleat.

Attach the roof (E) with a 6" length of brass continuous hinge. Install a 1" brass hook and eye to latch the roof closed..

Paint the foliage with acrylics. (We used Ceramcoat jubilee green for the leaves and thalo green for the shaded areas.) Apply a clear finish overall, a weatherproof one if you'll be hanging your birdhouse outside.

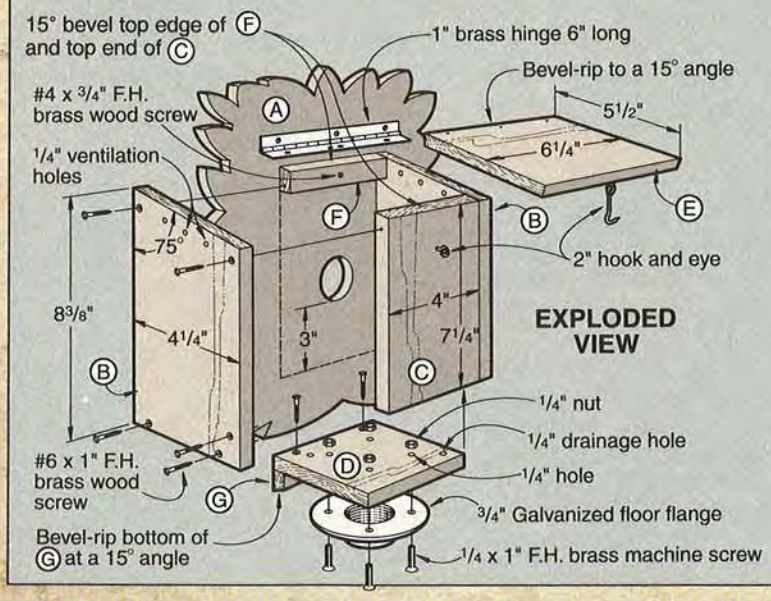

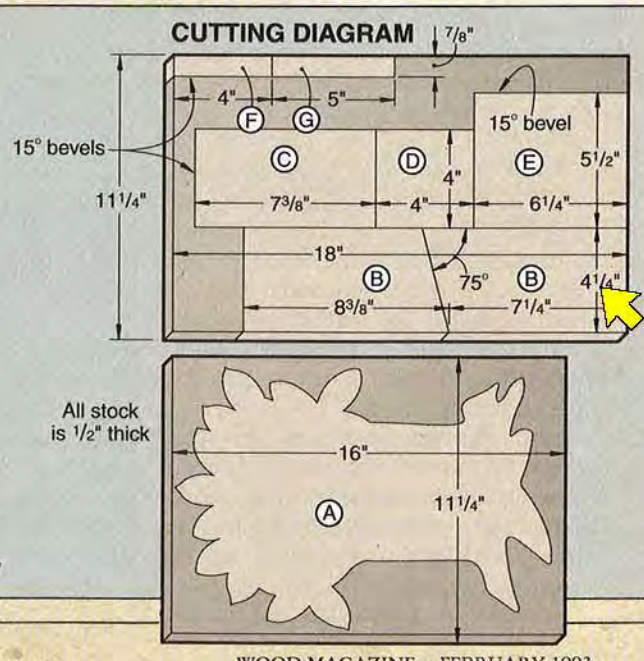

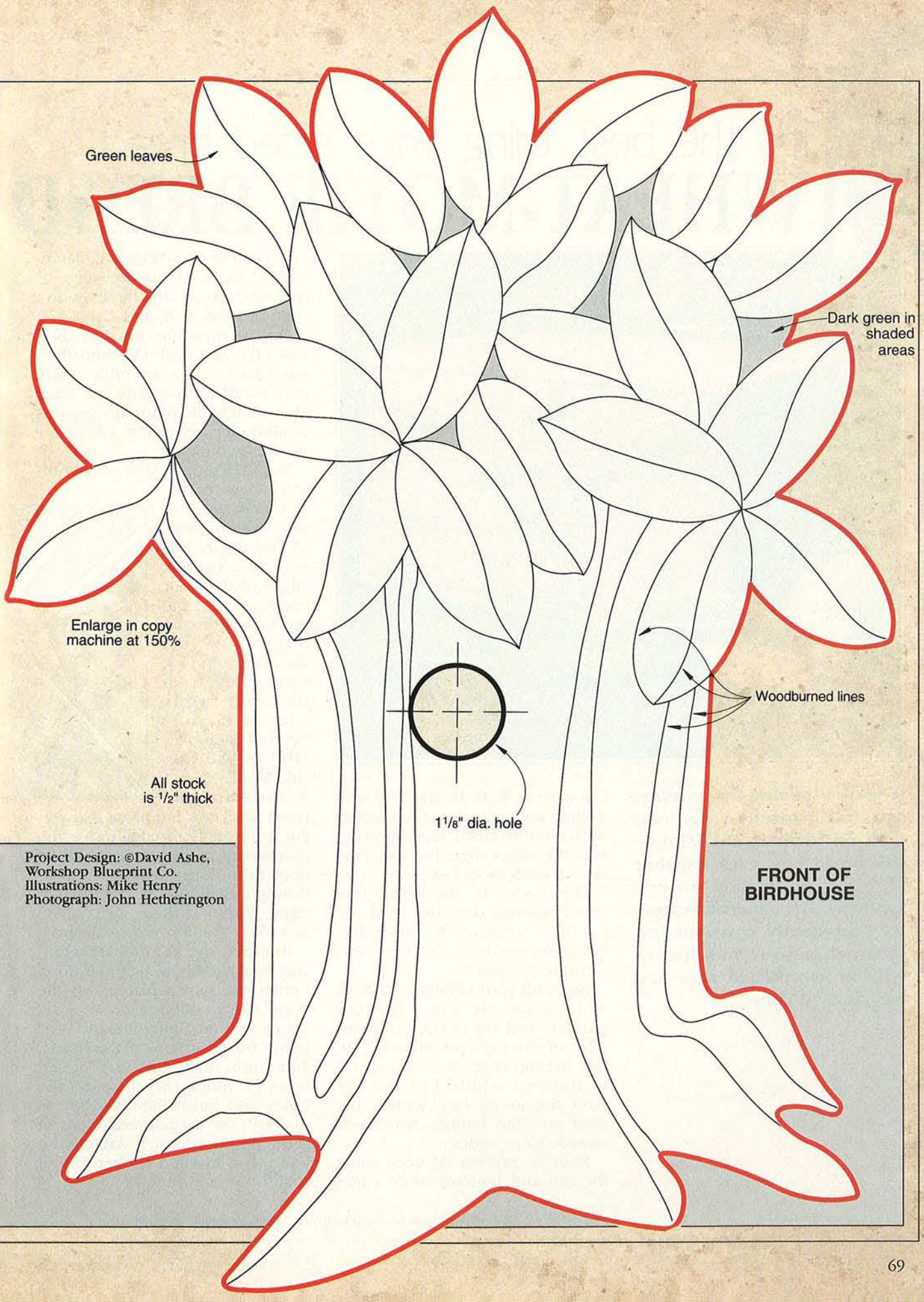
Green leaves
Dark green in shaded areas
Enlarge in copy machine at 150%
Woodburned lines
All stock is 1/2" thick
1 1/8" dia. hole

Project Design: ©David Ashe, Workshop Blueprint Co.
Illustrations: Mike Henry
Photograph: John Hetherington

FRONT OF BIRDHOUSE

The CRAFT SHOP

It's the best thing since sliced bread
WHEAT-MOTIF BREAD

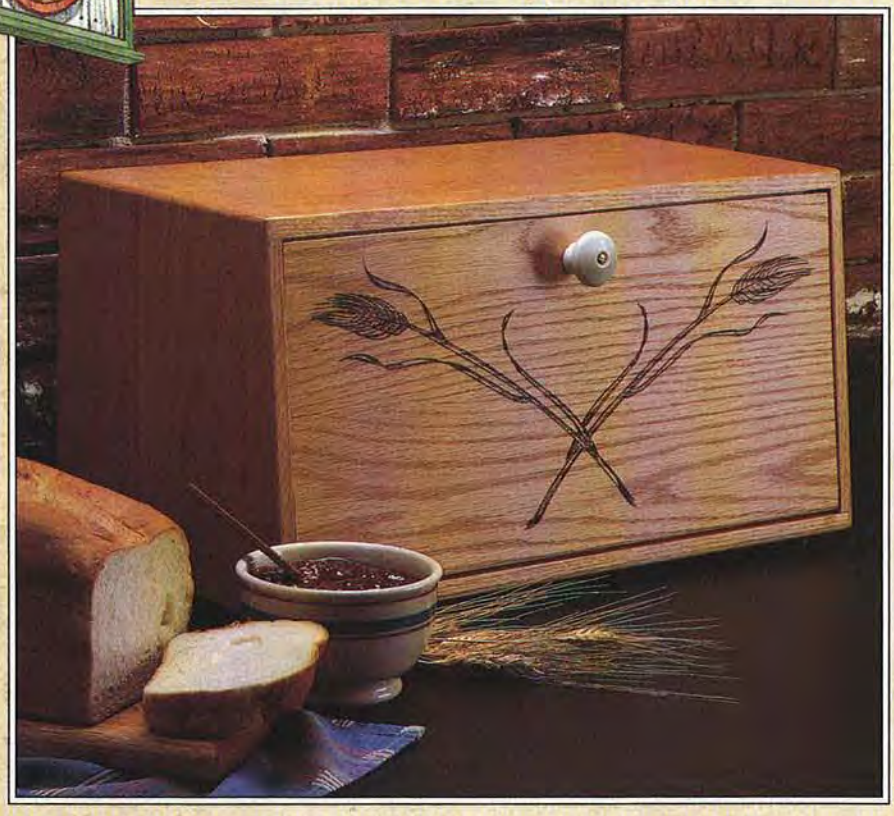

If you're looking for an easy, satisfying kitchen project, look no further. This simple oak bread box goes together as easily as a ham-on-rye sandwich. Its generous capacity and sturdy construction mean that your handiwork will be appreciated now and for years to come.

Print this article

Cut parts A, B, C, D, and E to size. Adhere the two sides (C) together with double-faced tape, making sure the edges align and the good side of each faces out.

Then, refer to the Bread Box Cross Section drawing, and lay out the 5° angle on the front edge. Bandsaw, sand to the line, and separate the pieces.

Now, tilt your tablesaw blade to 5° (you can use a side for your guide), and bevel-rip the front edge of the top (A), bottom (B), and the top edge of the door (D) to finished width. Cut the top with the inside face widest, the door and the bottom with their outside faces widest.

Rout ½" rabbets ¼" deep along the top and bottom inside edges of each side (C). With a tablesaw and ¼" dado set, cut a groove ¼" deep ¼" from the back inside edge of parts A, B, and C.

Dry-assemble the top (A), bottom (B), and back (E), and then the sides (C). For assembly, apply glue to all parts except the back (E), which floats in the grooves to allow for expansion. Check for square, and clamp.

Rout ¼" round-overs on all outside edges of the box and the outside bottom edge of the door, but not the inside edges of the door opening. Trim the piece cut from the top to 17½" for the door stop (F). Glue it ½" from the front inside edge of the top, beveled side parallel to the box side angle.

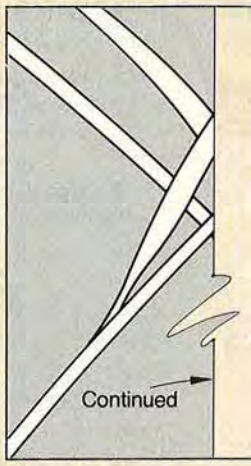
Continued

With double-faced tape, tack the piece that you cut from the door edge inside the bottom of the opening to hold the door flush. Then, drill a 5⁄64" hole through each side into the door edge where shown. Drill a ⅛" hole for the knob where shown.

Remove the temporary stop, and sand the bread box and door. Center the wheat pattern on the door, and woodburn it.

Cut two 6d finish nails to 1¼" long (from the top of the head), and push them into the drilled holes for hinges. Set them, fill the holes, and finish the breadbox as desired (we used several coats of satin polyurethane). Attach the knob, and install a rubber foot at each bottom corner.

Project Design: Jim Boelling Illustrations: Mike Henry Photograph: John Hetherington

BOX

WHEAT

FULL-SIZED PATTERN

BREAD BOX CROSS SECTION

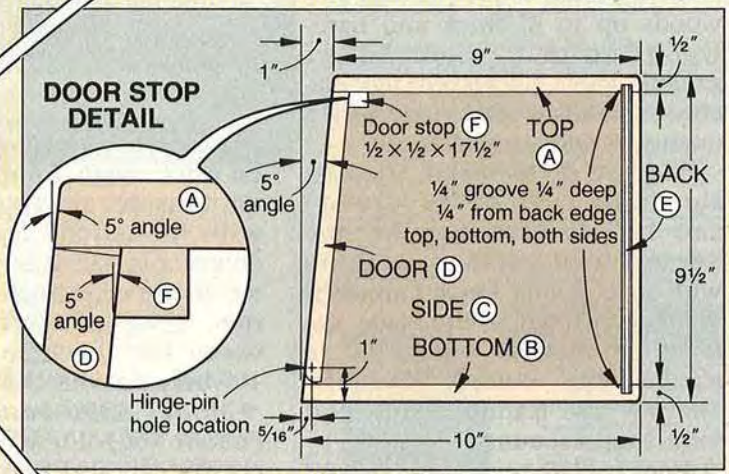

Bill of Materials					
Part	Finished Size				
	T	W	L		
A *Top	½"	9"	18"	O	1
B *Bottom	½"	10"	18"	O	1
C Sides	½"	10"	9½"	O	2
D *Door	½"	8½"	17 7/16"	O	1
E Back	¼"	9"	18"	OP	1
F Stop	½"	½"	17½"	O	1

*Initially cut parts marked with an * ⅝" wider than listed above. Then, rip each to finished size according to the how-to instructions. The piece ripped from A will make part F.

Material Key: O-oak, OP-oak plywood

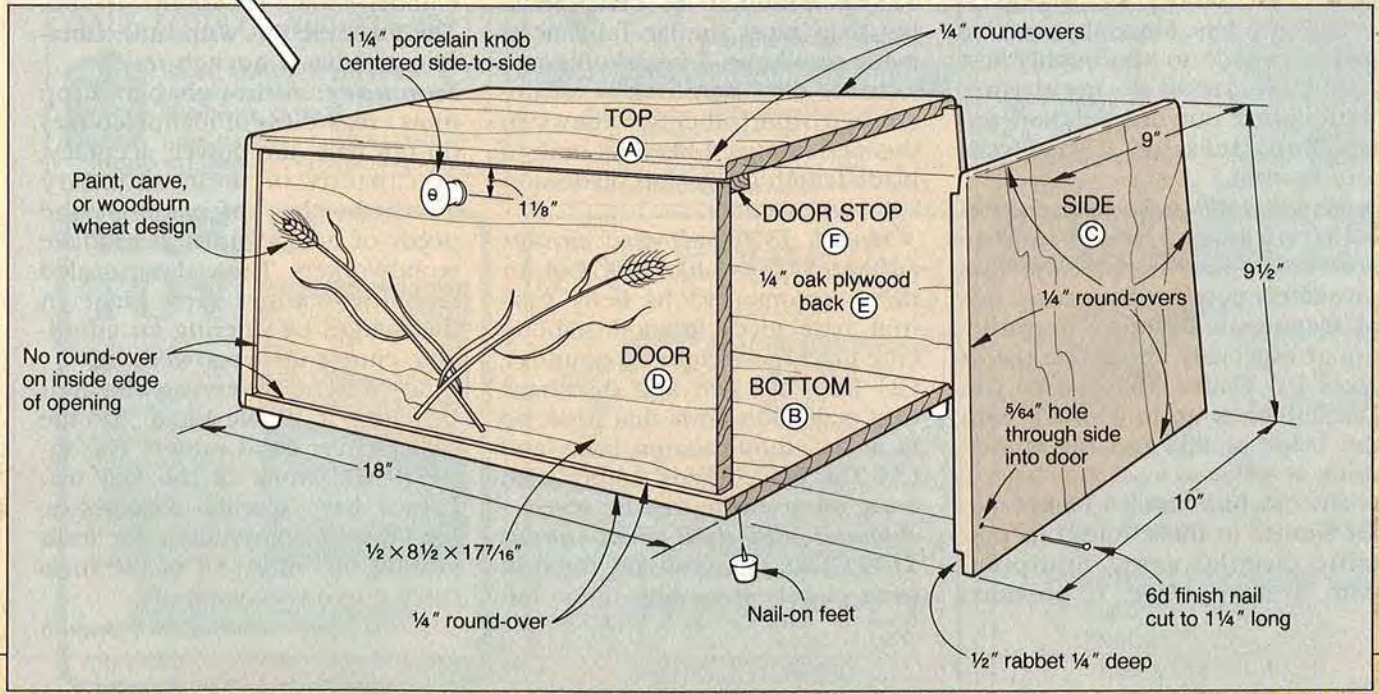

A tool-buyer's test report

Skil's benchtop line

Print this article

Something new from the company that made its name in portable tools

Model 3396 bench grinder

Model 3370 belt/disc sander

Model 3330 scrollsaw

Model 3400 tablesaw

Model 3380 drill press

Like many of us, you may have a limited budget and space for pursuing your woodworking. It's no wonder, then, that power-tool manufacturers have poured ever-increasing energy into developing benchtop power tools. As we noted in the August 1992 issue of *WOOD®* magazine (Tool-Industry Insider, *page 9*), benchtop tools represent one of the fastest-growing categories in an otherwise "flat" power-tool market.

We also announced Skil's unveiling of a new line of benchtop tools including a 10" tablesaw, 16" scrollsaw, 8" drill press, 4" belt/6" disc sander, and 5" and 6" bench grinders. Since then, we've had a chance to thoroughly test and evaluate Skil's new line. Here's what our independent tester, Bob McFarlin, discovered, tool by tool.

• ***Model 3400 tablesaw (about $180 through mail-order sources).*** For the money, this saw offers good performance, lots of features, and sturdy construction. I especially appreciate that it takes 10" blades. That means you can cut stock up to 3" thick with the blade at 90° and up to 2½" thick at 45°.

The machine has a 13-amp. motor similar to those found in portable circular saws. Equipped with a sharp blade, it provided plenty of muscle for ripping softwoods up to 3" thick and hardwoods up to 1" thick. To get smooth cuts, I replaced the machine's standard steel blade with a quality carbide-tipped blade.

Because of its small, die-cast aluminum table (17⅝" × 26⅝") and 12" rip capacity, the saw doesn't lend itself to working with sheet goods. Once I adjusted the fence parallel to the blade, the fence returned to within 1/32" of parallel after multiple resettings. The saw also features a dust port for a shop vacuum.

• ***Model 3330 scrollsaw (about $135).*** Although it's better looking than most similar Taiwanese-made scrollsaws, I found only two features that significantly distinguish it from other scrollsaws in this price range. I liked its built-in blade-length gauge and blade-storage compartment.

• ***Model 3370 belt/disc sander (about $135).*** I like this tool for three reasons: (1) Its hefty cast-iron base gives it good stability (the machine weighs 42 pounds); (2) Both the belt and disc have dust-collection ports that hook up to a 1¼" shop-vacuum hose; and (3) The belt loosens simply with a tug on a tension-release lever.

• ***Model 3380 drill press (about $135).*** Like the scrollsaw, the drill press closely resembles other Taiwanese-made products in its modest price range. I found it to be a no-nonsese, reliable performer with limitations typical of machines this size. It has a ¼-hp motor, five speeds from 620 to 3100 rpm, 2" of spindle travel, 7" between the chuck and table, and 10" between the chuck and base.

• ***Model 3396 bench grinder (about $60).*** I tested the 6" model; you can also buy a 5" version (model 3395), for about $10 less. The machine ran with little vibration and has a quench tray.

Summary: Although benchtop tools (regardless of manufacturer) do not have the power, accuracy, or capacity of their stationary brothers, they often meet the needs of novice and intermediate woodworkers. These down-scaled machines earned their place in the market by offering an affordable entry into woodworking.

So, when reviewing the Skil benchtop tools, we asked: "Do the tools deliver good value?" The answer: Yes. None of the Skil machines have glaring weaknesses, which is a compliment for tools costing this little. All of the tools carry a two-year warranty.

Photos courtesy of Skil Corporation

LAST CHANCE
AT 92 INVENTORY

20x30 25x50 30x40 40x60

SAVE Up To 40%

STEELMASTER 800-888-4606

Van Dyke's

Presents a Catalog

with supplies for upholstery, antique restoration, wood working, caning, brass hardware, carvings and many related trades!

VAN DYKE SUPPLY COMPANY · SUPPLIES FOR CREATIVE ARTS AND TRADES ·

40 Years in Creative Arts & Trades

Many Hard-To-Find Items!

SEND $1.00 FOR CATALOG TO:

VAN DYKE'S RESTORERS

Dept. D55, P.O. Box 278, Woonsocket, SD 57385

DRY YOUR OWN LUMBER...

...With an EBAC Wood Drying System

- 3 MODELS UNDER $3000
- RUNNING COSTS ABOUT 3¢-5¢ PER BF

If you thought you couldn't afford your own dry kiln — NOW YOU CAN!

CALL TODAY 1-800-433-9011

EBAC LUMBER DRYERS
106 John Jefferson Rd., Suite 102
Williamsburg, VA 23185
1-800-433-9011 • FAX (804) 229-3321
in Canada: 416-985-2123 • FAX (416) 985-3708

WOOD TOY

★ Patterns
★ Parts
★ Wheels
★ Many New Patterns to Choose from.
★ Executive toys

SEND $1.00 FOR NEW CATALOG & RECEIVE COUPON FOR **FREE** WHEELS & AXLE PEGS.

toys and joys

Box 628W Lynden, Wash. 98264

Wood Moisture Meter

pocket-size
MINI-LIGNO
Range: 6-20% in 1% steps
Size: 1"x2¼"x5½"

$110 only

Including Case, Battery, Pins for 3/16" or 7/16" measuring depth.

Also available as Mini E, 6-36%

Lignomat USA Ltd.
503-257-8957 800-227-2105
P.O. Box 30145
Portland, OR 97230

The tools you need to Buy Right the First Time!

BRIDGEWOOD

Machinery and accessories for professional quality woodwork are available by mail from our new, exciting Bridgewood® Machinery and Accessories catalogs. Send $1.00 for both catalogs.

WILKE Machinery Company
3230 Susquehanna Trail, York, PA 17402
Telephone: 717-764-5000

93A

BELSAW®

A name you can trust for quality woodworking equipment!

The "World Famous" Belsaw Planer/Molder

★ It can make *and* save you money ★
★ Plane your own lumber ★
★ Create your own intricate moldings ★
★ Surface sand your lumber ★
★ Heavy cast iron bed ★
★ Positive drive feedworks system ★
★ Includes 5HP,continuous duty motor ★
★ Magnetic controls ★

★ MADE IN THE UNITED STATES ★

Call 1-800-468-4449 Today!

36 Page Woodworking Equipment Catalog - $2.00
Demonstration Video Tape - $10.00
Visa, MasterCard & Discover Card Accepted!
The Belsaw Company • Dept. WM1
4111 Central Ave. N.E. • Minneapolis • MN • 55421

KNIFEMAKING PROJECTS

APACHE HUNTER KIT

21.95 + 5.95 Shipping

PRE-SHAPED BLADES and step-by-step instructions make knifemaking fun and easy! Material and tool lists are included with each project kit. Our 68-page catalog of hard to find tools, polishing supplies and other unique items includes more than 85 PRE-SHAPED BLADES, handle materials, and other knifemaking supplies. Order today and we will include our KNIFEMAKING PROJECTS booklet FREE! Send $3.00 for catalog and booklet to:

JANTZ SUPPLY
309 W. Main Dept. W Davis, OK 73030
1-800-351-8900

FULL SIZE WOODCRAFT PATTERNS

Fun · Profitable · Fast Service · Satisfaction Guaranteed

- ☐ Attractive "Dutch Windmill" - 5 feet tall including blades.
- ☐ 21 **Holiday Decorations** for doors, walls, windows.
- ☐ 100 **yard ornaments** - animals, birds, signs, more.
- ☐ 14 helpful projects for **Great Vegetable Gardens.**
- ☐ **Country Classics** - 25 fun, profitable projects.
- ☐ **Yard Characters** - Dutch, Amish, bending lady, more.
- ☐ 125 pattern Fun Packet **PLUS** "Shop Secrets".
- ☐ 25 "wind-action" **Whirligigs** - fun to make and watch.
- ☐ Over 20 quick and easy **birdhouses.**
- ☐ Top-selling **"Show-Stoppers"** - 22 craft fair favorites.
- ☐ Attractive **Park Bench** converts to Picnic Table!
- ☐ **Yard Bonanza** - arbor, trellises, arches, fences, more!

Send $8.00 per packet · Pick 3 for only $18.00
MC/Visa · Fax (603) 332-4579 · Catalog $2.00 (Free w/order)
ACCENTS, Dept. MA23, Box 7387, Gonic, NH 03839

CRAFTSMAN EQUIP YOUR SHOP AT GREAT SAVINGS

Catalog of over 300 plans to build your own tools, $1.00, refundable

A wide variety of plans from complete machines & attachments to handtools for home, school & commercial shops. Featured also are accessories for wood and metal cutting lathes, drills, saws, sanders etc., plus things to make of wood and metal.

WOOD-MET SERVICES
3314 WEST SHOFF CIR. DEPT. WOOD
PEORIA, ILLINOIS 61604

NEW WOODCARVING TEACHING AID AND INSTRUCTION BOOKLET

Learn how to carve faces in seven easy steps with Bill White's Teaching Aid and step-by-step Instruction Booklet. This aid makes carving fun and for profit. For $15.95 you receive both the Teaching Aid and Instruction Booklet.

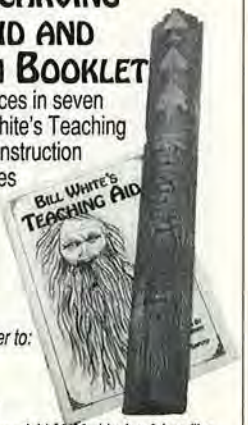

Send check or money order to:
BILL WHITE
R.R. #7, Box 93
Springfield, IL 62707

IL residents add 6.25% tax • Add $3.00 shipping & handling

QUALITY TOOLS

for Woodworking & Laminating

- Plate Joiners & Biscuits
- Carbide Bits & Cutters
- Slitters & Planers
- Virutex® Products

Catalog $1.00

Practical Products Co.
3925 Virginia Ave.
Cincinnati, Ohio 45227
Tel: 513/561-6560

ASK WOOD

Print this article

Whether your woodworker's license reads "Beginner," "Intermediate," or "Advanced," you're bound to have a few questions about your favorite hobby. We can help by consulting our staff and outside experts. Send questions to:

Ask WOOD
Better Homes and Gardens®
***WOOD®* Magazine**
1912 Grand Ave.
Des Moines, IA 50309-3379

We'll answer all questions, but due to the volume of mail, we can't publish every letter. We may edit letters selected for publication.

Hankering for a homemade kiln

I get a lot of free wood—red oak, cherry, birch, maple, and ash—all in small cutoffs from 6″ to 24″. However, none of it comes dried. I tried drying the wood in my kitchen oven, using only the heat from the light bulb inside. The wood dried out okay, as long as the heat stayed below 100 degrees.

I'd like to build a 32 cu. ft. kiln using a light-bulb heat source and a small fan that operates all the time. My questions are: What is the correct temperature for heat-drying wood, and, alternatively, could I mount a small air conditioner to my cabinet and use dehumidified cold air?

—David Frantz, Conroe, Texas

David, the two methods you suggest would indeed remove moisture from wood. (A dehumidifier would work better than an air conditioner.) However, any method of wood drying—if used improperly—can result in defects such as splits, checks, warpage, and honeycombing.

We discussed both of your ideas with kiln operators and other wood-drying experts. They said that without precise controls, you can expect a high probability of damaging your wood. Because wood varieties and samples vary greatly in moisture content and drying characteristics, it takes a drying facility with precise controls to do the job right.

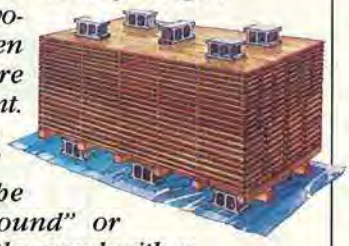

Kiln-drying wood is a two-stage operation. Most green wood starts with a moisture content of around 80 percent. In the first stage, the kiln removes "free moisture" down to 30 percent; the second stage removes "bound" or cellular moisture, leaving the wood with a moisture content of 6 to 8 percent.

So, David, your kiln ideas have merit, they just lack precise controls. Your best bet? Air-dry your wood. It's the safest "home-brew" method. For more advice, contact the Texas Forest Products Laboratory, P.O. Box 310, Lufkin, TX 75901

"Snipe" hunting saves board ends

When I run a board through my 12″ Jet portable thickness planer, I get sniping at the ends which ruins several inches of the board at each end. Is there some way I can prevent this sniping and avoid damaging valuable wood?

—Joe P. Patrick, Kennesaw, Ga.

Joe, you can choose to either eliminate sniping (the scooping out of wood across the grain of a board by planer or jointer blades), or work around its negative effects. To eliminate sniping, keep in mind that the scooping occurs when boards go in or out of the planer unsupported or improperly aligned with the tool's bed at either end. Ideally, the board should travel through the planer level to the bed. To ensure level support, build 3' to 4' long plywood extension tables on both ends of the planer. Check to see that the table surfaces rest level with the planer bed.

To work around the possibility of sniping, always run your lumber through the planer before you make final cuts. That way, if sniping occurs, it will be on waste ends.

Skinny plywood makes dadoing difficult

I enjoy learning new techniques from your magazine. I have just one question for you. Why is it the ¾″-oak plywood I buy measures 11/16″? I have an Amana 8″ stackable dado set. When I combine the chipper blades, they make an exact ¾″ cut. This leaves me with a 1/16″ to 1/32″ gap when I insert a plywood end into my dado. This amount of clearance is intolerable. Can I correct it?

David H. Walsh, Madison, Wis.

David, let's begin first with the plywood you are buying. Plywood today comes from many different mills all over the world. This means an inherent variance in milling methods and quality control, and, ultimately, differences in plywood thickness. Plywood from overseas markets usually runs thinner than American-made plywood. We'd recommend buying American-made plywood which should have a stamp on the edge of the sheet showing its grade and the mill from which it came. Overseas plywood has a red mahogany core.

For the second, and probably more realistic approach, measure the plywood you intend to buy at the store to make sure it matches the dado width that your blade set or adjustable dado blade typically cuts. And keep in mind, too, that if you need to reduce or add to the width of your dado set, you can do so by simply subtracting or adding chipper blades and cardboard spacers or washers. Before cutting your workpiece, try your adjustment on scrap lumber to check the width of the cut.

Continued on page 76

WOODWORKER'S CATALOG

Over 4000 products to **BUILD, REPAIR, RESTORE, REFINISH** anything made of wood!

2 year subscription Only $1.00

It's the catalog woodworkers rely on–116 pages jam-packed with fine woods, veneers, tools, finishing supplies, and much more–all top quality, all reasonably priced, all with our 60-day no-questions-asked guarantee. For your 2-year subscription send $1.00 to:

CONSTANTINE
Serving Woodworkers for 181 years
2050 Eastchester Rd., Dpt. 35302, Bronx NY 10461

SALE

Prices Good Thru 4/30/93

SANDING DRUM SETS - all Drums are 2" Long, 1/4" Shaft. Set includes Coarse and Fine grit sleeves.
#47044 1/2", 3/4", 1" and 1-1/2" dia. drums 8.95
#47045 all above plus 2" dia. drum 13.95
Sanding Sleeves - Includes 2 ea: Coarse, Med & Fine
#80722 1" Dia. 2.40
#80723 3/4" Dia. 2.40
#80724 1" Dia. 2.70
#80726 1-1/2" Dia .. 3.00
#80728 2" Dia. 3.90
WOODEN LETTERS - 3/16" thick, unfinished
#32041 3/4" 6 ea. Letters: "A" thru "Z" 10.25
#32042 3/4" 6 ea. Numerals: "0" thru "9" 4.25
#32091 1-1/2" 4 ea. Letters : "A" thru "Z" 10.25
#32092 1-1/2" 4 ea. Numerals: "0" thru "9" 4.25

CRAFTER'S MART

P.O. BOX 2342-W • GREELEY, CO 80632
72-Page CATALOG: $1, Free with any order. Check, MasterCard or VISA (include daytime phone, card no., exp. date & signature). PROCESSING CHARGE: Continental U.S. $4; AK, HI, APO/FPO $10; Canada $16; Foreign 20% plus $10 (U.S. Funds). CO Res. add 3% tax. Info: (303) 351-0676 PHONE ORDERS: 8am-5pm Monday-Friday, **1 - 800 - 999-3445**

THIN STOCK

25 SQUARE FOOT PACKS SURFACES TWO SIDES

¼" packs	Maple	$47	Red Oak	$51	
Walnut $91	Cherry	$59	Poplar	$33	
⅜" packs	Maple	$57	Red Oak	$62	
Walnut $101	Cherry	$70	Poplar	$39	
½" packs	Maple	$67	Red Oak	$72	
Walnut $110	Cherry	$86	Poplar	$44	

We pay UPS shipping to most destinations in eastern time zone, other areas slightly higher. Discover, MC & Visa accepted. Free catalog with order.

BRISTOL VALLEY HARDWOODS
4300 Rt 64, Canandaigua, NY 14424
1-800-724-0132 Ext. 193

Grip-Tite™ magnetic featherboard

3 second, one-handed setup
No clamping!

As featured in Wood Magazine "Products That Perform", April, '91, p. 27
"I Can't Say Enough..."
"Easy To Use..."
"I was impressed by it..."

Use it on tablesaws, jointers, shapers.

$32.95 + S/H
Satisfaction Guaranteed
30 day full refund

Mesa Vista Design • 804 Tulip Road
Rio Rancho, NM 87124 1 (800) 475-0293

SUPER BINDER Stops Cord Hassle

Strong nylon loop attaches to item. Wrap 2 ply Velcro strap around coil either way to secure. Pull thumb tab to release. Weatherproof.

Order special 10/pkg.: (8in.)**$17** (12in.)**$19** (16in.)**$21** Assorted 12/pkg.**$23**

MA RESIDENTS ADD 5% SALES TAX
MC/VISA or Mail Check or M.O. to:

MEGAMARK Products Co.
9 Jerome St. Medford, MA 02155
1-800-543-5904
24 HOUR ORDER LINE

FUTON FRAME PLANS $14.95

Twin Size (39" x 75") Color Catalog $2.00
Full Size (54" x 75") FREE with order
Footrest plan included.

Excellent for extra sleeping space then easily converts to sofa or multi-position lounge. Ideal for small bedrooms or college dorms.

Specialty Furniture Designs, 797 W. Remus Rd., Dept. W-16, Mt. Pleasant, MI 48858 1-800-892-4026
Visa/MC accepted MI Res 4%

RIP SAW

The Portable Sawmill.

The "affordable portable" one man band sawmill. Weighs only 45 lbs. Cuts 20" diameter logs into lumber. Minimum 1/8" to maximum 9" thickness.

Write or call for free brochure.

Videos also available.

Better Built CORPORATION
(508) 657-5636
845 Woburn Street, Dept. W, Wilmington, MA 01887

SAVE MONEY!

KILN DRY LUMBER

MAKE MONEY!
Kiln Dry for others.
As the nation's largest manufacturer of dehumidification Dry Kilns, we can supply you with the same type equipment used by many of the major firms.

nyle DRY KILN SYSTEMS
1-800-777-NYLE
Nyle Corporation 207-989-4335
P.O. Box 1107, Bangor, Maine 04401

Disaster Insurance for Woodworkers

SQUARE DRIVE SCREWS

Made in USA or Canada!

Do-it-Yourself Dozen: Contains **1200** screws, 100 each in 12 popular sizes, with a magnetic bit holder, 3 insert driver bits and a 4-in-1 hand driver. Twelve optional heavy duty storage bins stack, or may be wall mounted with the supplied quick disconnect brackets. **Sizes included:** #6 x 1/2, 5/8, 1-1/4, #8 x 5/8, 1-1/4,1-1/2, 2, 2-1/2, #10 x 1-1/2, 2, 2-1/2, 3

#1200-FSL-A Without Bins: List $61.12 ***Your Price $49.95***
#1200-FSL-B With Bins: List $73.12 ***Your Price $59.95***
Plus Delivery, Virginia Residents add 4-1/2% Sales Tax

Catalog is Free, Samples & Catalog $3

McFEELY'S SQUARE DRIVE SCREWS
PO Box 3 • 712 12th st
Lynchburg • VA 24505-0003
1-800-443-7937

Delivery Charges

Order Total	S&H
$.01 to $20.00	$3.75
$20.01 to $50.00	$5.25
$50.01 to $80.00	$6.75
Over $80.00	$8.00

UPS Ground Service Only
Alaska, Hawaii, US Territories and Foreign countries extra.

FREE TOOL CATALOG

WOODCRAFT
Quality Tools Since 1928
1992 Fall Catalog

Visit Your Local Woodcraft

Woodcraft offers over 4,000 of the finest quality woodworking tools, books, and supplies available today in our 140 page, full-color catalog. With Woodcraft's top-notch service, technical support, and 90 day guarantee of satisfaction, you can't afford to pass up this opportunity for a free catalog.

Call toll-free:
1-800-542-9115
Or write:
WOODCRAFT
Dept. 93WI02S
210 Wood Country Industrial Park
P.O. Box 1686
Parkersburg, WV 26102-1686

ASK WOOD

Continued from page 74

Boning question driving him "batty"

Robert Redford, playing Roy Hobbs in the movie *The Natural*, makes a reference to "boning" a handmade bat. This treatment or finish supposedly helped the bat resist chipping, marring, and splitting. Will you please let me know if you've heard of this process? Not knowing is driving me "batty."

—Marcus R. Engebretson, Scarville, Iowa.

Marcus, though we won't snag your question, we'll let Bill Williams, vice president of advertising and public relations for Hillerich & Bradsby, field it. Bill's company makes the famous Louisville Slugger bats. "Old-timers would literally run a bone up and down the length of the bat, pressing down hard," says Williams. "This would compress the wood cells, sealing the open grain of the bat. Also batters felt it put some extra sting on the ball, causing it to come off the bat harder and more quickly." Some players, according to Bill, still bone their bats, but today they use a pop bottle or anything that's hard and smooth. He says, "Just like in Roy Hobbs' times, players will still do about anything to get an edge." By the way, carvers often do the same thing to their work. They call it burnishing.

Are keyless chucks okay?

Do you believe keyless chucks, those that require only hand tightening, are okay? Do they grip as tightly as keyed chucks?

—Edward Kluck, Saginaw, Mich.

Yes, Ed, today's keyless chucks work quite well, according to Bill Krier, our products editor. "We even recommend retrofitting with a good-quality keyless chuck like the one made by Jacobs," he says. "To install one, you'll first need to remove your old chuck by unscrewing it from the threaded spindle. Then, just screw on the keyless chuck and you're ready to go." Most tool stores and tool catalogs stock them. You can order a Jacobs keyless chuck from The Woodworkers' Store, 21801 Industrial Blvd., Rogers, MN 55374-9514, or call 612/428-2199. The price is $17.95 plus $4.95 for shipping and handling. This ⅜" chuck replaces any conventional chuck mounted on a ⅜" spindle with 24 threads.

STORAGE BUILDINGS
WORKSHOPS & MORE
MANUFACTURER DIRECT
LIMITED OFFER

EASY DO-IT-YOURSELF CONSTRUCTION
PACKAGES INCLUDE STEEL FRAMES, SHEETING AND HARDWARE
FEATURED PACKAGES INCLUDE:
12'-0" BAY SPACING
40 psf Snow Load, 20 psf Wind load
CERTIFICATION AVAILABLE

30x36 Value $6,181 NOW $3,169	36x48 Value $9,763 NOW $5,016
40 x 60 Value $13,942 NOW $7,293	46x72 Value $18,875 NOW $10,316

Other sizes available

MIRACLE TRUSS
1-800-843-8275
FAX 612-544-1835
Made in America WM

1930 ANTIQUE FIRE TRUCK - measuring over 19" long with realistic Spoked Wheels that you can make yourself. Model Plans include a detailed & complete Frame & Engine Assembly, turning Booster Reel, unique Steering connected with a working Steering Wheel, Ladders, Connecting Hoses, folding Hoses, Extinguishers, Indian Tanks, Tool Box & Cage, Valve Box, a Detailed Pump, & even 8 each Firemen's Hats, and much more.

C.O.E. TRACTOR RIGG - this 19" long 10 Wheeling power house is loaded with details from the complete Frame with the new "air ride" suspension, to the detailed Cab that tilts forward to reveal the awesome Engine. Horns, Lights, Expansion Tanks, Mirrors, Fifth Wheel, to Lug Nuts on the Wheels make this model a collectors dream.

CLASSIC FARM TRACTOR - this rugged 9½" long "Work Horse" is a scaled replica of a Classic Farm Tractor from an era gone by. Besides the detailed engine & drive train, this Wood Block Model also includes an optional tricycle type front end or the wide front end.

Send U.S. check or U.S. money order for plans in the above amount to: **Gatto Plan Supply**, Box 1568, R.D. #1, Hamburg, PA 19526

Anytime Anywhere Anywood

CURVED or STRAIGHT MOLDINGS

Both are yours with a W&H Molder/Planer

Thousands of professionals and serious woodworkers use our American-made cast iron molder/planers to produce smooth moldings, raised panels, crowns and curved molding.

In the shop or at the job site, W&H meets your needs every day with quick knife changeover and ultimate versatility with all kinds of wood.

Over 40 years of experience supports our products with a 5 year warranty! Call or write today for our **FREE** information kit!

800-258-1380 (USA) 603-654-6828
FAX 603-654-5446

Williams & Hussey Machine Co., Inc.
Dept. 233BM
P.O. Box 1149 Wilton, NH 03086

W&H

NEW! **Heavy Duty Plate Joiner Kit With Case**

$229.95

#DW682K DEWALT High Performance Industrial Tools

DW705	12" compound saw	$359.
DW704	12" mitre saw	319.
DW945K-2	12v drill kit w/2 batteries	174.
DW944K-2	9.6v drill kit w/2 batteries	154.
DW364	7-1/4" saw w/brake	148.
DW254	0-2500 deck scrugun	89.

TOOL CRIB OF THE NORTH

PO Box 1716
Grand Forks, ND 58206

1-800-358-3096

ONE-MAN SAWMILL Turns Timber into CASH!

NOW! CHOOSE FROM CIRCULAR OR BANDSAW MODELS!

The Sawmill goes right to the trees and turns out smooth, true-cut lumber – even beginners get excellent results. Just one man (no crew needed) can easily cut enough on weekends to save hundreds of dollars over high lumberyard prices. Use as little as 25 horsepower. Factory-Direct selling keeps price low, and convenient time payments may be arranged.

PHONE TOLL FREE 1-800-942-4406 Ext. TW7
TIMBERKING, INC. DEPT TW7
1431 N. TOPPING, KANSAS CITY, MO 64120

WIN A FREE HEGNER SCROLL SAW

After fifteen years of leadership, HEGNER Precision Saws are still the #1 choice! Now you can win a HEGNER... absolutely FREE! We will also send you our catalog, at no cost or obligation. Call or write today!

1•302•322•2226 ☎
ADVANCED MACHINERY IMPORTS, LTD.
P.O. Box 312, Dept. 543 New Castle, DE 19720

• COUNTERSINKS • CHUCKS • EXTENSIONS • DRILLS •

NUT SETTERS • DRIVERS • EXTENSIONS • CHUCKS

NEW! As Seen On TV

LOCK IN YOUR CHUCK AND THROW AWAY THE KEY

Simply pull sleeve to change bit instantly. Fits any power drill. **Lifetime Guarantee**

Make The Switch To

INSTY-BIT®

Quick Change System
The Professional Choice

Call Toll Free 1-800-552-BITS
Patented and precision-made in the USA

NUT SETTERS • DRIVERS • EXTENSIONS • CHUCKS

• COUNTERSINKS • CHUCKS • EXTENSIONS • DRILLS •

THE "DUCHESS"

FANTASTIC ROUTER PROJECT

INSTALL YOUR FAVORITE TUNE

PLAN . . **$11.95** Heirloom quality MUSICAL jewelry box with necklace closet and four drawers. Just open the door and let the music play! Size 14" H x 11" W x 6" D.

Send Check or Money Order to:

HONEYWOOD DESIGNS
P.O. Box 315, Dept. B, Chatham, IL 62629

FREE BROCHURE!

★THE WOODWORKING SHOWS★
machinery • tools • supplies

VISIT THE SHOW NEAR YOU!

- Atlanta
- Baltimore
- Charlotte
- Chicago
- Dallas
- Harrisburg
- Indianapolis
- Kansas City
- Milwaukee
- New Jersey
- No. California
- North Florida
- So. California
- St. Louis
- Tampa
- *plus others*

Call for free brochure
Monday - Friday 8 am - 5 pm Pacific Time
1-800/826-8257 or 310/477-8521

Increase the life expectancy of sanding belts and discs by 400%

RECONDITION CLOGGED BELTS IN SECONDS!
NU-Life Abrasive Belt Cleaner
Makes belts loaded with raw wood look and perform like new again...and again...and again...

- Up to 400% less annoying downtime
- Increased productivity
- Higher quality finish
- Quick, simple, inexpensive
- Available in standard and custom sizes

Be sure to specify
NU-LIFE ABRASIVE BELT CLEANER
#1 in sales for 30 years.

Abrasive Service Co. Inc.
398 Broad St., Forestville, CT 06010
(203) 584-2091 FAX (203) 584-2313

DEALER INQUIRIES INVITED

Full-Size Professional Plan
LIBRARY CHAIR/STEPS

Build this unique reproduction! American Empire in styling, this beautiful combination chair or library steps doubles as extra chair or sturdy steps for reaching shelves. As Chair: 17¼" wide, 18" deep, 33½" high. As Steps: 33½" high.

Plan #714 .....$15.00
(catalog free with order)

CATALOG listing 200 full size professional furniture plans — **$3.00**

VISA MasterCard

FURNITURE DESIGNS, INC., Dept. BL-23
1827 Elmdale Ave., Glenview, IL 60025
(708) 657-7526

WARREN'S FINEST COMBINATION WHITTLERS/CARVERS KIT IN CUSTOM REDWOOD BOX

1993 WOOD SHOP SPECIAL #COMBI-TCE
$89.95
P.Pd. (USA)

CONTENTS:
(8) Gouges*
(6) Small Blades*
(1) Large Blade*
*All Honed Sharp
(2) Handles (Interchangeable):
(1) ea. Walnut (Palm), and Rosewood.
(2) Sharpening Blocks:
(1) ea. Abrasive, and Leather

Designed for wood-carvers who appreciate fine quality tools. (Made in USA) Est. 1927.
Plus Free Pattern and Instruction Booklet.

1993 Warren Woodcarving Tool & Supply Catalog FREE WITH ORDER. Catalog only, send $1.00
*N.Y. State Residents Add State Tax

Send Check or Money Order to:
Warren Tool Co., Inc.
2209-1 Rt. 96, Rhinebeck, NY 12572
Tel. (914) 876-7817 • USA only • COD UPS Available
Canada and Foreign Please send Money Order
Canada Add $3.00. Foreign Orders Add $5.00 shipping fee.

BRANDING IRON
For hard and soft wood

$29.00
Plus $3.00 for shipping and handling
Nebr. residents add correct sales tax
SATISFACTION GUARANTEED or your money back

- **Shipped in one week**
- Solid brass head — raised letters
- 1st Line: HAND CRAFTED BY — as above
- 2nd Line: Your choice — 20 characters/spaces max.
- Electric unit available for $49.00 + $3.00

CALL TOLL FREE . . .
1-800-826-7606

Order by mail from: **NOVA TOOL CO.**
Free brochure available
12500 Finigan Rd., Dept. B9
P.O. Box 29341, Lincoln, NE 68529

VISA MasterCard DISCOVER

Quality
MECHANISMS
For Making
WOODEN BARREL

- Pens
- Pencils
- Roller Balls
- Fountain Pens

plus other related items.

Wholesale/Retail

Call or Write:

The Berea Hardwoods Co.
6367 Eastland Rd. Brookpark, Ohio 44142
216-234-7949 *Master Card/Visa*

PALEO CANOE COMPANY ™

BUILD YOUR OWN CEDAR STRIP CANOE

★ 2½ HR STEP-BY-STEP VIDEO INCLUDES FREE FORM TEMPLATES AND ALL THE KNOW HOW TO GUIDE YOU FROM BEGINNING TO END. **$39.95 plus $3.00 S&H.**

★ DO-IT-YOURSELF KITS INCLUDE ALL MATERIALS NEEDED TO BUILD A 14' OR 16' CANOE PLUS OUR STEP-BY-STEP VIDEO.

FOR MORE INFO & PRICES CALL OR WRITE

PALEO CANOE CO., P.O. BOX 491
BEDFORD, MA 01730, (617) 275-3004

CATALOGS FOR CRAFTSMEN

Select the catalogs you want from over 80 listings! Use coupon on page 82 to order.

Now available: the Super Max 37" single or dual drum. In one pass sand cabinet doors, face frames, table tops and counter tops to a flawless finish in minutes. Select the Performax drum sander to fit your budget and your needs, $300 – $3500. Brochure $1.00. Circle #1.
PERFORMAX PRODUCTS, INC.

VACUUM PUMPS New, low cost air-powered VAK Pump for vacuum clamping, veneering, composites, bent laminations, etc. 1800 #/sq.ft. of force. Saves time and eliminates costly mechanical clamps and other tools. VENEER round, flat, antiques shapes without mating forms. Vacuum bag conforms to the shape for even pressure. Catalog $1.00. Kits start at $99. Circle #2.
QUALITY VAKUUM PRODUCTS INC.

ECON-ABRASIVES' new catalog is here! You'll find our expanded line of wood-working accessories to include: Velcro® backed discs, sanding drums, backup pads, chisels, router pads, machinery, & hundreds of other woodworking related items. Free catalog. Circle #3.
ECON-ABRASIVES

KLOCKIT™

Enter the world of clockmaking with KLOCKIT's new 1993 Spring catalog. 68 pages offer over 150 new products. Every item is guaranteed: Your total satisfaction or money back. Helping you create memorable moments through time. Send for your FREE catalog today. Circle #4.
KLOCKIT

End "Cam-Out" with over 300 varieties of Square Drive Screws. Included are hardened steel cabinet screws, face frame screws, trim head screws, and solid brass, silicon bronze, stainless steel and plated styles. McFeely's also features carbide tipped router bits and saw blades, clamps, woodworking books, and more. Catalog, $1.00. Circle #5.
MCFEELY'S

Operating at ultra-high-speed, 400,000 revolutions per minute, the SCM engraver is the fastest handpiece on the market. It's light, vibration-free & designed to fit your hand for hours of comfortable operation. The secret of success with the SCM system is in the ultra-high-speed handpiece, plus an extremely simple stencil design system. Use a variety of stock stencils supplied by SCM, or make your own on a copying machine. Send for information. $1.00. Circle #6.
SCM ENTERPRISE

Improve Your Woodworking Skill! Craftsmen around the world have discovered the secret of better quality work. The 72-page Japan Woodworker Catalog is loaded with a huge selection of Japanese saws, waterstones, chisels, gouges, carving tools, planes, cutlery and garden tools. Send for 1993 catalog and all supplements for two years. $1.50. Circle #7.
THE JAPAN WOODWORKER

VAN DYKE'S RESTORERS — your source for hard-to-find items in woodworking, upholstery, antique restoration and trades. This new 264-page catalog features a large selection of solid brass hardware, chair/table/roll-top desk components, carved China cabinet glass, relief carved wood appliques and more! Catalog $1.00. Circle #8.
VAN DYKE'S RESTORERS

One-page brochure from NOVA TOOL CO. describes branding irons that enable you to put your name on your woodwork quickly and easily. Made especially for branding wood, they can be made with 1, 2, 3 or 4 lines of copy. Both torch heated and electric models available. $1.00. Circle #9.
NOVA TOOL CO.

Tools on Sale™, a division of Seven Corners Ace Hardware, has a wide variety of tools for the professional or do-it-yourselfer. Our catalog is packed with the most respected names in the industry: Makita, Milwaukee, Skil, B&D, Ryobi, Delta, Bosch, Porter Cable and many more. We are noted for fast friendly service. Catalog $2.00. Circle #10.
TOOLS ON SALE™

EXACT CUTS—Finally, a simple alignment kit that will turn your radial arm or table saw into a precision cutting tool. Make professional quality furniture, cabinets or a whole house. Send for information. 50¢. Circle #11.
EXACT CUTS

Add Music To Your Wood Projects! Unicorn Studios' catalog features wind-up and electronic musical movements, water globe kits and blinking musical lights. One of the largest selections of tunes anywhere - many unique or hard-to-find. Send for a full-line catalog. $1.00. Circle #12.
UNICORN STUDIOS

Classical Designs and Modern Electronic Music Box Plans. FULL SIZE PATTERNS with Parts Kits available, for Beginner to Intermediate Woodworker. Largest selection/lowest prices for Electronic Music Boxes. Wood turnings, parts, and supplies. Bulk prices available. $1.00, refundable. Circle #13.
CRAFTER'S MART

MADE IN USA

EASY DOES IT—with HTC's power tool accessories. Discover many unique items, designed only with you, the dedicated woodworker, in mind. Make your machinery safer, increase the working area of your shop and accomplish nearly impossible tasks easily, quickly, accurately. Full-line catalog and price list. Free. Circle #14. **HTC PRODUCTS, INC.**

Send for the new 1993 STEVE H. WALL LUMBER CO. product catalog. Sixteen page catalog containing hardwood lumber, exotics, hardwood veneer plywood, flooring and custom cabinet doors. Send $1.00. Circle #15.
STEVE H. WALL LUMBER CO.

Penn State Industries

BUY DIRECT AND SAVE! Your source for hard to find wood-working products. Our woodworking machines are manufactured by the SAME FACTORIES that make SEARS, DELTA and other popular brands. Scroll Saws, Planers, Lathes, Dust Collectors, Sanders and "one of a kind" products and accessories. FREE CATALOG. Circle #16.
PENN STATE INDUSTRIES

Variable feed rate planers, drum sanders and stroke sanders from Woodmaster Tools. Free information on 12", 18" and 25" planers. . . 26" and 38" drum sanders. Facts on 30-day free trial. Free. Circle #17.
WOODMASTER TOOLS

Dry your own lumber using our equipment and your insulated chamber. Dehumidification systems from 300 BF to 45,000 BF. Easy to operate equipment offers high quality kiln-dried lumber for pennies per foot. These long-lasting made-in-the-USA units can pay for themselves in one month! Free Catalog. Circle #18.
NYLE STANDARD DRYERS, INC.

Loveable Seal Complete Kit

NEW #1-LSK

Beautiful Oak Custom Knife, Whittling Blade (Honed Sharp), Basswood (Seal) cut-out (5 1/2" long). 6-page Carving instruction booklet. Send for catalog, $1.00. Circle #19.
WARREN TOOL CO.

Grizzly
IMPORTS, INC.
1993 CATALOG

FREE WOODWORKING CATALOG—We offer a tremendous selection of fine Woodworking machinery, power tools and accessories at unbelievably low prices. Choose from a wide variety of stationary machines, Makita tools and hundreds of useful accessories including router bits, shaper cutters and more. Circle #20.
GRIZZLY IMPORTS, INC.

Make popular country folk art wind action whirligigs and mobiles, country shelves and shadowboxes, eyecatching yard figures, Christmas decorations, simple furniture, toys, games and much more. Simply trace our full size patterns onto wood and cut out . . . no enlarging is ever necessary! Don't miss our latest catalog featuring over 1,000 unique projects—$1.00. Circle #21.
WINFIELD COLLECTION

HERITAGE
Building Specialties

If you want to spend more time in your wood shop and less time shopping for wood, PROJECT-PAK is for you! Our catalog contains over 100 PROJECT-PAKs of projects originally built in **WOOD** magazine. Send today and enjoy hassle free woodworking. Catalog $1.00 (refundable with purchase.) Circle #22.
HERITAGE BUILDING SPECIALTIES

★THE WOODWORKING SHOWS★
machinery • tools • supplies

WOODWORKING, TOOLS AND SUPPLIES—Hundreds of products for the woodworker demonstrated and sold at discount prices at every ★Woodworking Show★. In-depth seminars and free workshops on a variety of woodworking topics. Shows are scheduled in 27 cities. Send for free brochure. Free. Circle #23.
★THE WOODWORKING SHOWS★

Quality gold plated mechanisms for making wooden barrel pens, pencils, rollerballs, and fountain pens. Letter openers, quartz clock fit-its, hinges, etc. also available. Send for catalog. $1.00. Circle #24.
BEREA HARDWOODS
QUALITY CRAFT DIVISION

Carving faces start here—Whether you are an accomplished woodcarver with a desire to further your trade, or a novice carver looking for a place to start, Bill White's handy detailed, easy-to-follow, step-by-step teaching guide and a few simple tools are all you need. You will soon be carving intricate detailed faces with techniques you can use over again. Send for information. $1.00. Circle #25.
BILL WHITE TEACHING AID

One man saw mill, weighing only 45 lbs. Ripsaw cuts 20" diameter logs any length into dimensional lumber. The narrow kerf band saw blade cuts quickly and accurately with minimum waste. Maximum cutting width of 14" with a thickness adjustment from 1/8" to 9". Prices starting at $1299. MC, Visa, Discover accepted. Videos available. Free information. Circle #26.
BETTER BUILT CORPORATION

Unlock the furniture building potential of your router. Combine it's smooth finish with the versatile capabilities and easy setup of the Woodchuck Indexing Router System to create distinctive furniture and more. Catalog and newsletter $2.00. Circle #27.
PHANTOM ENGINEERING INC.

Are you looking for a unique do-it-yourself project? Are you tired of incomplete, hard to understand instructions? Look no further. Build a beautiful Cedar Strip Canoe following our complete instructional video. All you need are simple tools, 60-80 hours & basic woodworking experience. Send for brochure. 50¢. Circle #28.
PALEO CANOE COMPANY

At last, an exciting new line of realistic wood block models that you can build with your own scrap wood and dowels and my easy-to-follow instructions. Highly detailed plans from 50 parts to 250 separate parts. Brochure 75¢. Circle #29.
GATTO PLAN SUPPLY

VERITAS—INNOVATION IN TOOLS. Order your FREE color catalog of woodworking innovations such as the Tucker Vise, Tapered Snug Plug Cutters, sharpening systems, drilling jigs for bookshelves, 32 mm construction and Euro hinges, scraper burnishers, bench hardware kits, measuring devises and much more. FREE Catalog. Circle #30.
VERITAS TOOLS

Furniture Designs, Inc.

Catalog of 200 full-size professional plans for building fine, museum-quality furniture, including cradles, roll-top desks, tables, chairs, buffets, beds, chests, gun cabinet, rocking horse, children's furniture and more. Catalog $3.00. Circle #31.
FURNITURE DESIGNS, INC.

If you enjoy wood carving or wood working, a versatile Marlin wood carving machine may be just what you need. Sign carving, three-dimensional carving of decoys, sculptures, plaques, panels and moldings as well as gun stocks and furniture pieces are easily carved on one of the three models of machines Marlin offers. FREE BROCHURE. Circle #32.
MARLIN INDUSTRIES, INC.

NEW! Craft & Woodworking Catalog. Top-quality tools & accessories for your shop. This new catalog includes complete information & prices on HEGNER Precision Scroll Saws, blades, & accessories for other scroll saws, HEGNER Lathes & Duplicators, HEGNER Accura Precision combination machine, PLANO Vertical Glue Press, FELDER Woodworking Systems, bar clamps & more. Free. Circle #33.
ADVANCED MACHINERY IMPORTS

FREE Woodworking Tool Catalog! Woodcraft Supply offers over 4,000 of the finest quality woodworking tools, books, supplies, and cabinetry hardware in our complete full-color catalog. Cabinetmakers, craftsmen, carvers, woodturners, and woodworking hobbyists have depended on Woodcraft since 1928. Toll free ordering and technical assistance, too. Send for catalog. Circle #34.
WOODCRAFT SUPPLY.

DELPHI
STAINED GLASS

80-page color catalog of stained glass, beveled glass, hard-to-find tools, unique patterns, kits, books, plus tips & advice. Instructional videos start at only $10.95. For 19 years, we've supplied hobbyists and professionals with quality products, friendly advice, and fast 24 hour shipping. Catalog $4.50 (refundable on order). Circle #35.
DELPHI STAINED GLASS

93-94 TOOL CRIB catalog offers wide selection of merchandise for home woodworkers to industrial builders and features top manufacturers such as Dewalt, Black & Decker, Delta, Makita, Porter Cable, Bosch, Milwaukee, Ryobi, Freud and many more. We offer new competitive prices with quality service and same day shipping. $3.00 for your 208-page 93-94 catalog. It's worth it! Circle #36.
TOOL CRIB

HOME LUMBER CO.

Home Lumber—For the largest selection of Makita at the right price. We also provide great pricing on Amana Carbides, Bostitch Air Nailers and David White Instruments. Same day shipping, free freight. We accept Visa, MasterCard, Discover, COD. Send for free information. Circle #37.
HOME LUMBER

Steelmaster Buildings are available in almost any size for almost any use. 10' to 100' wide & any length imaginable. Whether you need a back yard shop ... an industrial shop ... equipment storage building, you'll find one that's just the right size for your job. So easy to construct, most owners opt to construct their buildings themselves for even bigger savings. Send for information. $1.00. Circle #38. **STEELMASTER**

Catalog of over 300 plans to build your own tools. A wide variety of plans from complete machines and attachments to handtools for home, school and commercial shops. Featured also are accessories for wood and metal cutting lathes, drills, saws, sanders, etc., plus things to make of wood and metal. Send $1.00 refundable with order. Circle #39.
WOOD-MET SERVICES

Hot-off-the-press! Freud's New Router Bit Catalog is packed with technical information and new products. Our catalog features easy to follow charts, detailed information of our solid carbide and carbide tipped router bits and sets. We've also included our forstner bits - carbide and high speed steel, plus our drill bits and accessories. Catalog $1.00. Circle #40.
FREUD

Williams & Hussey. Thousands of professionals use our American-made molder/planers to produce curved or straight moldings. Over 40 years of experience with a 5-year warranty. In the shop or at the job site, W&H meets your needs every day with quick knife changeovers and ultimate versatility with all kinds of wood. Free brochure. Circle #41.
WILLIAMS & HUSSEY

With this Virutex® brand laminate slitter you can cut Formica® type decorative laminates cleanly without power or sawdust. Rolling cutters slice strips up to 3 1/4" with smooth edges. Catalog $1.00 Circle #42.
PRACTICAL PRODUCTS CO.

New, 52-page catalog of fine BRIDGEWOOD wood and metalworking machinery features exclusive line of BRIDGEWOOD machinery available for purchase or lease. The BRIDGEWOOD line includes industrial quality, heavy-duty machines for serious, amateur and professional woodworkers. Send $1.00. Circle #43.
WILKE MACHINERY COMPANY

Dremel's MiniMite Model 750 compact cordless rotary tool provides pinpoint accuracy for precision woodworking, refinishing, model building & other detail-oriented craft projects. The lightweight tool provides 2 speed operation powered by a 4.8-volt motor & rechargeable, replaceable battery pack. Catalog, $1.00. Circle #44.
DREMEL

This is the one catalog you cannot afford to be without. Our 1993 tools catalog is over 220 pages thick, all color, and filled with tips and techniques. The widest variety of fine woodworking hand tools, hand power tools, books, project supplies & finishing supplies separates this from all others. A great many items are exclusive to Garrett Wade. An invaluable reference & source book. $4.00. Circle #45.
GARRETT WADE COMPANY

Convert logs into valuable lumber—Wood-Mizer® Products manufactures a line of portable bandsaw mills that allow the novice as well as the experienced sawyer to safely convert standing logs into lumber. Then, with the use of our SolaryDry™ Kiln or VacuKiln™ to dry your lumber, you could increase the value of every board you produce. Product videos available. Send for 31-page catalog. $2.00. Circle #46.
WOOD-MIZER PRODUCTS.

Historic Ship Model Kits Catalog—Museum quality replicas you build yourself. Pre-cut wooden parts, metal and brass fittings, cloth sails, plans and instructions included in all kits. Send $1.00 for 80-page catalog. Circle #47.
MODEL EXPO, INC.

EBAC LUMBER DRYERS

Ebac Lumber Dryers offers a wide variety of sizes from 50 B.F. up to over 10,000 B.F. You get the highest quality dried lumber down to 6–8% moisture content. Our controllers make them easy to operate and energy efficient. Kiln Construction Guide included to build your own chamber. Circle #48.
EBAC SYSTEMS, INC.

NU-LIFE is a solid abrasive belt cleaner that removes dulling abraded material which is lodged between the abrasive grains. It makes the belt look and perform like new again. INCREASES THE CUTTING LIFE OF ABRASIVE BELTS AND DISCS UP TO 400%. MADE IN USA. Brochure $1.00. Circle #49.
ABRASIVE SERVICE CO., INC.

Quality Ogee Foot Moulding—We offer top quality hardwoods, various heights and patterns are available. These are assembled ready to install. Prices are reasonable. Send for free brochure. Circle #50.
BLUE RIDGE MOULDING

Super Binder stops cord hassle. Strong nylon loop attaches to item. Wrap 2 ply Velcro® strap around coil either way to secure. Pull thumb tab to release. Weatherproof. Durable. Send for free brochure. Circle #51.
MEGAMARK PRODUCTS CO.

WOODS OF THE WORLD
WOODWORKERS
Source

Exotic Imported and Domestic Hardwoods—Over 75 species of lumber, bowl blanks, turning squares and veneer. Collectors Sample Kit. 30 exotic and domestic woods. 1/2" x 3" x 6" sanded finish. Ideal for collectors, cabinet and furniture makers, designers and architects. Send for more information, $1.00. Circle #52.
WOODWORKERS SOURCE

The World Famous Belsaw Planer Molder—is regarded as one of the most versatile AMERICAN-MADE woodworking machines on the market today! Save money by planing your own lumber, & milling your own moldings. Thousands of professionals and hobbyists have discovered how versatile this power tool can be. Our new 36 page catalog, *"The Belsaw Times"* is packed with information & woodworking products you need at affordable prices! $2.00. Circle #53.
THE BELSAW COMPANY.

Eagle America's New 64 page, full color catalog offers the industry's largest selection of American Made Router Bits, Shaper Cutters, Forstner Bits and unique woodworking accessories. The new catalog features full size profiles, as well as technical illustrations. Eagle America offers fast friendly service including same day shipping. When you receive the new catalog enclosed will be a $10.00 introductory coupon good towards your first purchase. Free. Circle #54.
EAGLE AMERICA

Heirloom quality jewelry boxes styled after classic furniture. Most popular designs include music movements. Ideal for those seeking quality projects. Project plans, musical movements and related jewelry box hardware. Brochure (refund with order). $1.00. Circle #55.
HONEYWOOD DESIGNS

Dust-Free Sanding. See an immediate improvement in your finish when dust is eliminated from the sanding process. You simply can't duplicate the same extraordinary results without dust extraction. Exceeds all dust requirements set by OSHA. Catalog features information on Random Orbit Sanders, Half Sheet Sanders, and Rotary Sanders. 20 pages. $2.00. Circle #56.
FEIN POWER TOOLS

Specializing in Abrasives and Refinishing Products for Wood Working. With RED HILL CORP., you're guaranteed quality, reasonable prices, prompt shipment and free freight. Small orders welcome! Send for information. Circle #57.
RED HILL CORPORATION

Magnate—provides a full line of affordable carbide tipped router bits and shaper cutters. Send for FREE new 1992-93 catalog. Circle #58.
MAGNATE

Our 1993 catalog offers an extensive line of Dremel tools and accessories, lots of woodworking equipment, polishing and grinding supplies, carving and engraving tools, our unique line of knifemaking kits utilizing our pre-shaped blades, making knifemaking an easy project for the woodworker. Our goal is to supply you with quality products, fast and friendly service, all at a price you can afford. Send for catalog. $3.00. Circle #59.
JANTZ SUPPLY

Here's a complete antique picture frame restoration kit, including training manual and video, that show you how to capture big profits fixing frames. Frame-Kit is a great add-on business or part-time opportunity. Complete furniture restoration catalog: $2. Free workshops. Circle #60.
MINUTEMAN, INC.

Over 600 easy-to-build woodworking project plans. Nation's leading source for door harp plans and parts, holstein cow projects, toy plans, country furniture, etc. Over 3000 hard-to-find specialty items. Send for your NEW 80 page catalog. Catalog $2.00. Circle #61.
MEISEL HARDWARE SPECIALTIES

THIN STOCK—We stock the thin lumber you're looking for. 1/4", 3/8", & 1/2" cherry, maple, red oak, poplar, hard maple and walnut. We also have exotic and domestic lumber. UPS bundles shipped to your door! Excellent service, satisfaction guaranteed. We accept Visa, MasterCard and Discover. Send for catalog. $1.00 Circle #62.
BRISTOL VALLEY HARDWOODS

Ready to assemble Queen Anne furniture for dining and living room. Queen Anne table & chair legs, country kitchen table legs, table bases, turning squares. All items available for quick shipment from stock, in walnut, cherry, mahogany, and oak. Free catalogue. Circle #63.
ADAMS WOOD PRODUCTS, INC.

Moisture-related problems such as shrinking, warping and cracking can ruin the most beautiful wooden pieces built. Avoid wood moisture problems by checking the wood with a moisture meter! The pocket-size Mini Ligno moisture meter is for the serious hobbyist and professional woodworker. Free catalog. Circle #64.
LIGNOMAT

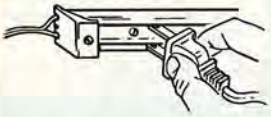

Since 1952, the handiest outlet designed. Ideal for many uses. Provides 3-10 feet of extra outlets where necessary for kitchens, stereo & VCR equipment, workshop. Send for brochure & price list. Circle #65.
TAP-A-LINE PRODUCTS, INC.

OVER 1000 WOODCRAFT PATTERNS! Create gifts, toys, whirligigs, lawn ornaments, holiday designs, country projects, bird houses, feeders, children's items, household accessories PLUS much more! Simple enough for beginners, fun and profitable for the pro. Catalog plus sample pattern only $2.00. Circle #66.
ACCENTS IN PINE

ROUTER BIT AND SHAPER CUTTER CATALOG—We have one of the largest selections of fine cutting tools in stock and ready for same day shipment. All of our router bits and shaper cutters are industrial quality and affordably priced. Also includes an expanded line of woodworking tools and accessories. Free catalog. Circle #67.
CASCADE TOOLS, INC.

Executive Wood Toys! Now you can create this 1929 Ford van and many others like it from our detailed and easy-to-read patterns. We offer you a complete line of patterns, parts, and wheels. Create lasting memories with our Executive Wood Toys. Catalog $1.00. Circle #68.
TOYS AND JOYS

Benchtop Power Tools— The complete line of Skil Benchtop Tools is shown in this six page brochure. Included are: A 10" Table Saw, 16" Scroll Saw, 8" Drill Press, Combination 4" Belt/6" Disc Sander and 5" and 6" Grinders. Free catalog. Circle #69.
SKIL

Now! Choose from circular or bandsaw models! The Sawmill goes right to the trees and turns out smooth, true-cut lumber-even beginners get excellent results. Just one man (no crew needed) can easily cut enough on weekends to save hundreds of dollars over high lumberyard prices. Send for information. Circle #70.
TIMBERKING, INC.

The Woodworkers' Store

The Woodworkers' Store catalog with over 150 new items. 100 full color pages of domestic and exotic hardwoods, veneers, wood parts, specialty hardware, kitchen accessories, finishing supplies, tools, books, and plans . . . exclusive items and hard-to-find specialties. Orders shipped in 24 to 48 hours. Satisfaction guaranteed. Catalog: $2.00. Circle #71.
THE WOODWORKERS' STORE

The original RADI-PLANE Professional edge finishing tools, made in USA. This elegant tool lets you quickly round-over an edge without the time and trouble of routing or sanding. Dual, micro-adjustable cutters provide for a quick, precise rounded edge in just one pass. Sug. Retail $21.95. Dealer inquiries invited.
Send for FREE information.
Circle #72.
L.A. MATHERS CO.

Craft Supplies USA offers the finest selection of woodturning tools, machinery & accessories available anywhere. Also available are pen and pencil kits as well as many other project kits. 48-page color catalog $2.00 (refunded with order). Circle #73.
CRAFT SUPPLIES USA

Router owners Large Discounts. New 32-page catalog featuring hundreds of high quality carbide tipped router bits and shaper cutters, solid carbide bits, the "Router Speed Control" and "Merle Adjustable Corner Clamp" plus more. Save 50% to 70%. VALUE, QUALITY and PROMPT SERVICE GUARANTEED. Send for information. Circle #74.
MLCS, LTD.

The EXCALIBUR T-Slot Saw Fence & Companion Sliding Saw Table are designed as a complete system to provide greater accuracy from your table saw. Features quick, easy installation, fits all table saws. Fence locks on both front & rear guide rails. Fence always stays parallel to the saw blade. Dual measuring scales. More features & accessories than other systems. Send for free information. Circle #75.
EXCALIBUR MACHINE & TOOL

Lawn Furniture Plans Color Catalog—Plans available are picnic tables, adirondack designs, swings, glider, futons, patio lighting, rockers, planters & a wishing well with running water. All items have been built & tested several times before drawn into plan form. Curved and hard to make pieces have full-size templates. $2.00. Circle #76.
SPECIALTY FURNITURE DESIGNS OF MI

PANEL SKATE

An Affordable, Portable Way to move just about anything

◆ V Channel centers panels ◆ Rubber coated aluminum e Wheels below top edge enable transport of flat objects. ◆ Weight 5 lbs. ◆Capacity 1000 lbs. ◆ L 12" W 6.75" H 4.5"

Wheel away back strain with the truck every shop should own. It's a CHEAP SKATE. Order today $49.95 + $5.00 shipping. coming soon: DOOR DOLLY

SHOPCARTS 415-552-9522
445 Harriet Street ◆ San Francisco, CA 94103

PROJECT-PAK®

(proj'ekt' pak) (n) 1.) A set of wood components whose dimensions are derived from a project's material list. Frequently employed by woodworkers to optimize their time and reduce stress without adversely affecting the challenge of their endeavor. Not to be confused with a "kit". 2.) A woodworker's dream come true!

PROJECT-PAKS®
SOURCED IN WOOD® MAGAZINE

Heirloom Crib	page 34	Feb. 93
Desk Set	page 59	Dec. 92

Our catalog features over 100 more **PROJECT-PAKS®**! Already have a project? Send us the material list and we will create a **PROJECT-PAK®** for you.

HERITAGE BUILDING SPECIALTIES
WATS: 1 800 524-4184 • FAX: (218) 739-5798
205 North Cascade • Fergus Falls, MN 56537

TRANSPOWER

SINCE 1953

FOR ORDERS & CATALOGUE CALL
1-800-654-7702 ext. 24

SUPER HEAVY DUTY WOODWORKING EQUIPMENT

500	1" Shaper Router, 3HP	$698	**150**	12" Auto Planer, 2HP	$328
50A	1" Shaper Router, 3HP	$765	**650**	15" Auto Planer, 2HP	$695
86A	1¼" Shaper Router, 3HP	$890	**800**	16" Auto Planer, 3HP	$765
860	Tilting Spindle Shaper	$1285	**20A**	20" Auto Planer, 3HP	$1195

Dust Collector 1HP Motor		$175
Dust Collector 1½HP Motor		$245
Dust Collector 2HP Motor		$285
Dust Collector 3HP Motor		$450

PROFESSIONAL SHOP EQUIPMENT

SB500	14" Band Saw 2 Speeds 1HP Motor	$230
SB600	16" Band Saw 3 Speeds 1½HP Motor	$490
SB700	18" Band Saw 3 Speeds 2HP Motor	$595
SB800	20" Band Saw 3 Speeds 3HP Motor	$1280
JT650A	6" Long Bed Jointer 1HP Motor	$275
JT860	8" Long Bed Jointer 2HP Motor	$640
HP500S	3HP Shaper With Sliding Table	$940
HD1500	Industrial Wood Lathe, Cast Iron Bed	$590
SD1200	120" Edge Belt Sander 2HP Motor	$940
SD800	80" Edge Belt Sander (Stand Optional)	$395
DS2500	25" Double Drum Sander 5HP Motor	$2650
VH120	Industrial 12" Disc Sander 48" Belt	$450
RF150	Auto Feeder 3 Wheels ¼HP Motor	$360
RF180	Auto Feeder 3 Wheels ½HP Motor	$420
RF350	Auto Feeder 3 Wheels 1HP Motor	$650
DB600	Air Drum/Brush Sander 3 Speeds	$195

★ **HTC Mobile Bases** ★ **USA Motors Available**

250	H.D. 10" Table Saw 1½HP Motor	$340
250	Equipped With BIESEMEYER 82" Fence	$575
20A	H.D. 10" Cabinet Saw 3HP Motor	$745
200	H.D. 10" Cabinet Saw 3HP Motor	$960

TCM Industries, Inc. 325 Paseo Sonrisa, Dept. 24, Walnut, CA 91789
In California (714) 594-7099. Ext. 24

ADVERTISEMENT

Every woodworker needs a wood moisture meter to insure the quality of his project. The Delmhorst Model J-88 has an easy-to-read LED Display which indicates 10 ranges of moisture content between 6% and 20%. This instrument is ideal for a woodworking shop or the serious craftsman. Send for a complete catalog. Free. Circle #77.
DELMHORST INSTRUMENT CO.

The RBI Hawk Scroll Saw, 4-in-1 Woodplaner, Router Table, and more. All these plus much more can be found in our new full color "All Products" catalog. See the entire line of products and accessories from RBIndustries, The American Toolmaker. Catalog FREE. Circle #78.
RBI INDUSTRIES

The Delta Building Trades and Home Shop Catalog is a source for quality wood and metalworking machinery for the professional craftsman and do-it-yourselfer. A complete line of band saws, circular saws, radial saws, drill presses, grinders, jointers, planers, sanders, lathes, shapers and accessories are featured in the 71-page catalog. Shipping/handling, $1.00. Circle #79.
DELTA INTERNATIONAL MACHINERY CORP.

Woods, Veneers, Finishes, Hardware, Tools—Over 4,000 different woodworking products in Constantine's 116 page, color 1993 catalog. 37 pages of hand & power tools, 23 pages of hard-to-find hardware, 13 pages of finishing supplies, plus books, kits, plans &, of course, America's most complete selection of fine hardwoods, softwoods, veneers, dowels, pegs, legs, spindles, carvings, filigrees-all backed by 181 years of experience & 60-day no-questions-asked guarantee. 2 year subscription $1.00. Circle #80.
CONSTANTINE'S

Buy your sanding belts direct from the manufacturer—Industrial Abrasives is the company that gives you 12 free belts with every dozen ordered. Catalog includes many specialty items not readily available in your hardware store. Free Catalog. Circle #81.
INDUSTRIAL ABRASIVES CO.

If you consider yourself a serious woodworker, this professional quality miter gauge is for you! The Accu-Miter is the perfect tool to create precise angles in a snap. The Accu-Miter's tapered shot pin assures dead-on accuracy year after year. The maximum margin of error is one minute, 43 seconds. That's less than 1/30th of a degree. That's guaranteed! Send for a free brochure. Circle #82.
JDS COMPANY, INC.

Catalogs for Craftsmen
ORDER FORM

Circle the catalogs you want. Fill out the coupon and include your check made out to Better Homes and Gardens®, WOOD for the cost of the catalogs you ordered plus the $2 handling fee. **No stamps accepted. No foreign orders. Please allow 4-6 weeks for delivery.**

1. $1.00	21. $1.00	41. FREE	62. $1.00
2. $1.00	22. $1.00	42. $1.00	63. FREE
3. FREE	23. FREE	43. $1.00	64. FREE
4. FREE	24. $1.00	44. $1.00	65. FREE
5. $1.00	25. $1.00	45. $4.00	66. $2.00
6. $1.00	26. FREE	46. $2.00	67. FREE
7. $1.50	27. $2.00	47. $1.00	68. $1.00
8. $1.00	28. 50¢	48. FREE	69. FREE
9. $1.00	29. 75¢	49. $1.00	70. FREE
10. $2.00	30. FREE	50. FREE	71. $2.00
11. 50¢	31. $3.00	51. FREE	72. FREE
12. $1.00	32. FREE	52. $1.00	73. $2.00
13. $1.00	33. FREE	53. $2.00	74. FREE
14. FREE	34. FREE	54. FREE	75. FREE
15. $1.00	35. $4.50	55. $1.00	76. $2.00
16. FREE	36. $3.00	56. $2.00	77. FREE
17. FREE	37. FREE	57. FREE	78. FREE
18. FREE	38. $1.00	58. FREE	79. $1.00
19. $1.00	39. $1.00	59. $3.00	80. $1.00
20. FREE	40. $1.00	60. $2.00	81. FREE
		61. $2.00	82. FREE

Send to:
Better Homes and Gardens® WOOD
Dept. FECS93
P.O. Box 2713
Boulder, CO 80329-2713

I am enclosing:
$ _____ for priced items
$ 2.00 for handling
$ _____ total remittance

Name _____
Address _____
City _____
State _____ ZIP _____

Coupon expires March 12, 1994

MAGNATE WB-15 Woodboxed 15pc Carbide Tipped Router Bit Set

1/4" shank, sand blasted

TOLL FREE 1-800-827-2316

MAGNATE BUSINESS INTL.

1930 S. Brea Canyon Rd. #170, Diamond Bar, CA 91765

714-861-1185 Fax 800-733-9076

Ask for Free 1992/93 Edition Catalog

PERFECT SAW ALIGNMENT!

All modes of alignment on radial arm or table saws, including compound cuts. It's like having a 24" blade on your table saw.

$54.95 (plus $4.50 postage/handling.)
Visa / Mastercard, check, money order or call (503) 997-2377.

Free brochure from EXACT CUTS,
5306 Boy Scout Rd., PO Box 268, Florence, OR 97439

To Order: **1-800-643-7411**

FREE FREIGHT SAME DAY SHIPPING

Makita LS1030 10" Miter Saw w/Blade. List 428.

Special **$189**

Makita 50 Tooth CT for LS1030 Reg. $53. **Sale $39**

6095DWE	9.6V Cordless VSR Drill Kit w/2 Batt.	$139
6201DWE	9.6V Hi Torque Cordless w/2 Batt.	$169
5007NBK	7¼" Circular Saw w/Free Case	$119
LS1011	10" Comp. Miter Saw w/ Blade	$439
2708W	8¼" Table Saw w/Carbide Blade	$274
1900BW	3¼" Planer Kit w/Case & Carbides	$119

Complete Line at the Right Price!

1-800-262-5482

That's 1-800-2-MAKITA

HOME LUMBER CO.

449 WHITEWATER ST., WHITEWATER, WI 53190 C.O.D.

Quickest Way to Round Edges

Actual size is 7" x 2" x 1"
Suggested Retail Price $21.95

At last, a simple hand tool that quickly and precisely rounds over sharp edges! Choice of bodies in Rockmaple or Blackwalnut. Radi-Plane Professional Edge finishing tools. Call 800-326-5415 for dealer nearest you. Made in the U.S.A.

L.A. Mathers Co.
Stockton, CA

RADI-PLANE

VACUUM CLAMPING & VENEERING

Low Cost Kits from $99

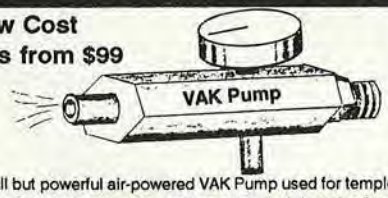

Small but powerful air-powered VAK Pump used for templet, CNC and hand routing. Strong 1800#/sq.ft of clamping force. Eliminate costly and obstructive mechanical clamps. Make unique VAK clamps to easily & quickly hold 2 pieces at right angles or butt joints for gluing, etc. VAK Pump used with VAKuum bag veneering on curved, flat or unique shapes. Do composites or bent laminations. (req's 1/2hp compr'or min)

CALL 1-800-547-5484 for complete information

Quality VAKuum Products 32 Longmeadow Rd Lincoln, MA 01773

5" or 6"

Supergrit®

Random Orbital Sander Discs
5" White PSA 180 Grit $15.00/100

PREMIUM QUALITY BELTS: BEST RESIN OVER RESIN, "X" WEIGHT 10/BOX

1x30 or 1x42	$ .70 ea.	4x21 or 4x21¾	$ .95 ea.
2½x16	.75	4x24	1.05
3x18	.75	4x36	1.30
3x21	.80	6x48	3.00
3x24	.85	6x89	5.60

ADHESIVE CLOTH DISCS: BEST RESIN OVER RESIN, "X" WEIGHT

5" Diameter	$ .80 ea.	9"	$ 1.80 ea.
6"	.90	10"	2.00
8"	1.40	12"	2.50

Prices quoted 80 grit, other grits available.

PREMIUM 9"x11" SANDPAPER SHEETS 100/PACK

WATERPROOF-BLACK S.C. • 100 Grit $28 • 180 Grit $25 • 220-1200 Grit $23
NO LOAD-WHITE S.C. • 80 Grit $30 • 120 Grit $26 • 180-400 Grit $20

A/O CABINET-BROWN or GARNET-ORANGE

40 Grit	50 PK	$16.00
50-60	50 PK	$14.00
80 Grit	50 PK	$13.00
100,120,150	100 PK	$22.00
180, 220	100 PK	$19.00
320 Grit	100 PK	$16.00 SALE
A.O. SAMPLER 8 grits 50-320	100 PK	$20.00 SALE

RED HILL CORP., P.O. BOX 4234, GETTYSBURG, PA 17325

Free Freight to most areas-$4.00 Handling
Free 20 page catalogue

(800) 822-4003

High Tech Engraving

See what everyone has been talking about!

Engrave on: Wood, Glass, Metal, Stone, Ceramics, Eggshell

- Precise Detail
- No Vibration
- 400,000 RPM
- No heat buildup
- You don't have to be an artist when you use our exclusive stenciling system.

1-800-755-0261 or 414-251-0981

SCM Enterprise • W16N11318 Western Avenue, Germantown, WI 53022

DELMHORST MODEL J-88 WOOD MOISTURE METER

INSURE THE QUALITY OF EVERY PROJECT VALUE PRICED AT $110

Easy to read LED Display indicates 10 ranges of Moisture Content between 6% and 20%. • 3yr. warranty • Complete with carrying case, batteries, and pins. • Delmhorst offers over 45 years of experience and service second to none!

CALL TOLL-FREE: (800) 222-0638
NEW JERSEY: (201) 334-2557

DELMHORST INSTRUMENT CO.

51 Indian Lane East, Dept.,931, Towaco, NJ 07082

TracTop®

ARMRESTS

#1 WORLDWIDE SINCE 1980!

EXCLUSIVE SLIDING CUSHION WITH PULL-OUT TRAY

COMFORT • LOOKS CONVENIENCE

Color Choices Install Yourself Return Guarantee

HONDA • ACURA • BMW • AUDI
NISSAN • SAAB • VW • VOLVO
New! FORD Escort & GEO Storm

Other models Free Literature V/MC/DISC

HUSCO 1-800-752-3181
ENGINEERING CO., INC.
17 CALVIN ROAD WILTON, CONNECTICUT 06897

The Japan Woodworker's Catalog is . . .

loaded with the best tools you can get your hands on. In our catalog you will find a hugh selection of Japanese saws, waterstones, chisels, planes, carving tools, cutlery and books. Send $1.50 for our catalog and supplements during the next two years.

THE JAPAN WOODWORKER
1731 Clement E-22, Alameda, CA 94501
Phone 1-800-537-7820

RESTORE FURNITURE for SECURE INCOME

Perfect 2nd Career

Make $200-$2,000 a day! Unlimited market; turn-key business. Free workshops. **Set-Up Shop for $2,999-$9,999!** Part-time or full-time. **Great for men, women, families.**

Make Molds*Veneer*Resilver Strip*Repair*Refinish

Business Preview Video $19.95 - Catalog $2.00

MINUTEMAN, INC., Ste. 17
Box 8, Waterloo, WI 53594
1-800-733-1776

Ogee Foot Mouldings

End your frustrations!

- Various styles, heights, woods
- No minimum • Affordable

Fax/phone 1-800-628-0428

Blue Ridge Moulding

PO Box 127, Hinton Va. 22831-0127

Print this article

Worth writing for...

You can get useful ideas and product information by mail. Use the coupon in this section to order your choice of literature listed below. Each company mails the catalogs or information directly to you.

POWER TOOLS

SCROLL SAW, CRAFT & WOODWORKING CATALOG—Specialty products from the exclusive distributors of HEGNER, the precision saws with SCROLLVERGNUEGEN. Complete information on scroll accessories, including blades and lettering guides. Also JET Clamps, HEGNER Lathes, PLANO Vertical Glue Press, and more. Toll-free customer service hotline included! AMI, LTD. $2.00. *Circle No. 3.*

PROFESSIONALS ONLY—Information on the new line of FELDER BF6 woodworking machines, including table saw, shaper, jointer/planer and combination machines, starting as low as $4,899. Also ULMIA Table Saws. Deal directly with the importer. Get complete information on the best professional machine value! AMI LTD. $1.00. *Circle No. 4.*

TOOL CRIB CATALOG—Since 1948, woodworkers, homebuilders, industry and schools across the country have looked to the Tool Crib as their source for power tools and equipment. Our prices are low; our sales people are knowledgeable; and our service is first-rate! We stock over 10,000 tools with top name brands like Black & Decker, Delta, Ryobi, Makita, Powermatic, Jet, Freud, Bosch, Porter Cable, Milwaukee and many more. We offer competitive prices with quality service and same day shipping. Send for your 208 page revised catalog. It's worth it! TOOL CRIB. $3.00. *Circle No. 6.*

THE WORLD FAMOUS BELSAW PLANER MOLDER—is regarded as one of the most versatile AMERICAN-MADE woodworking machines on the market today! Let us show you how to save money by planing your own lumber, and milling your own moldings. Thousands of professionals and hobbyists have already discovered how versatile this power tool can be. Our new 36 page catalog, "The Belsaw Times" is jam-packed with information and the woodworking products you need at prices you can afford! THE BELSAW COMPANY. $2.00. *Circle No. 8.*

PORTABLE SAW MILL—a one man saw mill weighing 45 lbs. Gas and electric models will cut dimensional lumber from logs up to 20 in. diameter. Send for brochure. Videos available. MasterCard, VISA and Discover accepted. BETTER BUILT CORP. Free. *Circle No. 10.*

NEW POWER TOOL ELIMINATES HAND SANDING —No more bloody knuckle, sore finger sanding. Unique sander, sands along edges and into corners, without bouncing off or running away. The secret is the distinct triangular sanding pad, combined with a high speed oscillation. German made. Brochure shows sander in action. FEIN POWER TOOLS, INC. $1.00. *Circle No. 37.*

INCA MACHINERY INFORMATION—Complete infor-mation on the famous line of Inca woodworking machines. Designed for precision work by the small to medium sized cabinet shop. Used by thousands of hobbyists and professionals. Table saws, bandsaws, joiner/planers, dust collector, radial arm saw. GARRETT WADE CO. Free. *Circle No. 44.*

HOME LUMBER—For the largest selection of Makita at the right price. We also provide great pricing on Amana Carbides, DeWalt power tools, Bostitch Air Nailers & David White Instruments. Same day shipping, free freight. We accept Visa, Mastercard, Discover, COD. Send for information. HOME LUMBER. $1.00. *Circle No. 48.*

WOODWORKING MACHINE CATALOG—New 24-page color catalog introduces many new do-it-yourself woodworking machines. Includes planers, dust collectors, drill presses, sanders, lathes, and specializes in scroll saws and accessories. PENN STATE INDUSTRIES. Free. *Circle No. 75.*

DUST COLLECTOR SYSTEMS—Keep your shop clean and safe from saw dust with one of our large capacity Commercial Style Dust Collection Systems. Catalog features our new DC-3 1-1/2 H.P. Portable System. Free hose and adapters are supplied with any purchase. Full line of Dust Collection accessories is available from Penn State Industries. Catalog. PENN STATE INDUSTRIES. Free. *Circle No. 76.*

SURFACE PLANER—Information package available from Penn State Industries describing the specifications and applications of its super 12½ inch surface planer. Special discount pricing available on current promotion. PENN STATE INDUSTRIES. Free. *Circle No. 77.*

GET TO THE FINISH LINE FASTER—with a Performax drum sander. Don't spend hours with a hand-held belt sander. Sand ultra-wide stock ultra-smooth in just minutes. Models start at $300 to $3495. Select the model that fits your budget and your needs. New metal abrasive fasteners keep sandpaper tight without re-wrapping. PERFORMAX PRODUCTS. $1.00. *Circle No. 78.*

WOODWORKING TOOLS & ACCESSORIES—While the history of RBIndustries goes back 60 years, this is the first time we've brought together all our precision-made tools and accessories in one catalog. The Hawk Precision Scroll Saw, 4-in-1 Woodplaner, Panel Master Door Machine, Router System, and much more. Quality equipment built here in the heart of America. When you buy from us, you deal directly with the manufacturer. Our prices, quality, and 3 year Warranty reflect our commitment. Send today for FREE information. RB INDUSTRIES, INC. Free. *Circle No. 84.*

SKIL POWER TOOLS—30 page booklet covers the complete line of Skil professional power tools and accessories. Included are saws, cordless drill/drivers, screwdrivers, drills, jigsaws, planes, sanders, routers, sander/grinders and a plate joiner. SKIL. Free. *Circle No. 87.*

SKIL POWER TOOLS—Full color, complete line, power tool catalog. Features cordless screwdrivers, drills and the cordless Skilwrench™. Corded products include circular saws, drills, drywall drivers, sanders, hammer drills, jigsaws, planes, laminate trimmer, sander/grinders, plate joiner, routers, xtra tools, bench top tools and recipro saw. All product accessories are also shown. SKIL. $1.00. *Circle No. 88.*

BENCHTOP POWER TOOLS—The complete line of Skil Benchtop Tools is shown in this six page brochure. Included are: A 10" Table Saw, 16" Scroll Saw, 8" Drill Press, Combination 4" Belt/6" Disc Sander and 5" and 6" Grinders. SKIL. Free. *Circle No. 90.*

TOOLS ON SALE™—A division of Seven Corners Ace Hardware, Inc. offers a catalog of over 400 pages of the most popular brands of power tools available anywhere, all at discounted prices. Included are saws, planers, sanders, routers, drills and more from manufacturers such as Milwaukee, Makita, Porter Cable, Black & Decker, Dewalt, Freud, Bosch, Delta, and many more. Now introducing a full range of Werner brand ladders. Tools on Sale™ division of SEVEN CORNERS ACE HARDWARE, INC. $1.00. *Circle No. 92.*

WILLIAMS & HUSSEY—Thousands of professionals use our American-made molder/planers to produce curved or straight moldings. Over 40 years of experience with a 5-year warranty. In the shop or at the job site, W & H meets your needs every day with quick knife changeover and ultimate versatility with all kinds of wood. Send for catalog. WILLIAMS & HUSSEY. $1.00. *Circle No. 93.*

PORTABLE SAWMILLS—Convert logs into valuable lumber—Wood-Mizer® Products manufactures a line of portable bandsaw mills that allows the novice as well as the experienced sawyer to safely convert standing logs into lumber. Then, with the use of our SolaryDry™ Kiln or Vacu-Kiln™ to dry your lumber, you could increase the value of every board you produce. We manufacture some of the most progressive woodworking equipment on the market today. Product videos available. Send for our 31-page catalog. WOOD-MIZER PRODUCTS. $2.00. *Circle No. 94.*

BRIDGEWOOD CATALOG—52-pages of quality wood and metalworking machinery: Planers, Shapers, Jointers, Wide Belt Sanders, and more. WILKE MACHINERY CO. $1.00. *Circle No. 96.*

TCM INDUSTRIES, TRANSPOWER—We carry a fine quality line of woodworking machinery, saws, shapers, planers and more. Send for free catalog. TCM/ TRANSPOWER. Free. *Circle No. 98.*

HAND TOOLS

RADI-PLANE—Professional edge finishing tools. The RADI-PLANE lets you quickly round-over an edge without the time or trouble of routing and sanding. Duel, micro-adjustable cutters provide for a quick, precise rounded edge in just one pass. Send for more information. L. A. MATHERS CO. Free. *Circle No. 142.*

PERSONAL BRANDING IRONS—Brochure describes branding irons that enable you to put your name on your work quickly and easily. Made especially for branding wood, they are available with 1, 2, 3 or 4 lines of copy. Changeable date also available. NOVA TOOL CO. $1.00. *Circle No. 160.*

HAND LAMINATE & WOODWORKING TOOLS—A new catalog is now available that covers 25 groups of special hard-to-find industrial-quality hand tools. Included are VIRUTEX® slitters, PLASTI-CUT® files, laminate shears, scoring cutters, trimmers, plate joiners, and many more. PRACTICAL PRODUCTS CO. $1.00. *Circle No. 175.*

IMPROVE YOUR WOODWORKING SKILLS!— Craftsmen around the world have discovered the secret of better quality work. The 72 page Japan Woodworker Catalog is loaded with a huge selection of Japanese saws, waterstones, chisels, gouges, carving tools, planes, cutlery and garden tools. Send for 1992 catalog and all supplements for two years. THE JAPAN WOODWORKER. $1.50. *Circle No. 190.*

PLANS

OVER 1500 WOODCRAFT PATTERNS!—Enjoy making gifts, toys, lawn ornaments, holiday designs, whirligigs, folk art, bird houses and feeders, household and yard accessories plus much more! Simple enough for the beginner, fun and profitable for the pro. Send for catalog plus sample pattern. ACCENTS IN PINE. $2.00. *Circle No. 310.*

SALES TESTED DESIGNS—available as plans only, parts kits, or plans and parts kits. Complete stock of parts, tools and supplies. Door Harps to Digital Electronic/Wood Projects. Full size plans! Catalog. CRAFTER'S MART. $1.00. *Circle No. 328.*

FULL-SIZE FURNITURE PLANS CATALOG— Illustrates and describes over 200 plans for making furniture of quality found in museums and fine furniture stores. Plans include rolltop desk, cradles, dining tables, chairs, buffets, chests, gun cabinets, poker table, children's furniture, rocking horse, spinning wheels, and more. Bill of materials exploded drawings assist the woodworker. FURNITURE DESIGNS, INC. $3.00. *Circle No. 345.*

STICKLER FOR DETAIL?—At last an exciting new line of realistic wood block models that you can build with your own scrap wood and dowels and my easy-to-follow instructions. Highly detailed plans for a 20x8 ¾-in. dump truck. GATTO PLAN SUPPLY. $8.00. *Circle No. 355.*

JEWELRY BOX PLANS—Jewelry boxes styled after classic furniture. Most popular designs include music movements. Ideal for those seeking quality woodworking projects. Honeywood Designs offers project plans, musical movements and related jewelry box hardware. Send for brochure (price refunded with first order). HONEYWOOD DESIGNS. $1.00. *Circle No. 377.*

PROJECT PLANS—Full-size patterns for over 500 easy-to-build woodworking projects. Nation's leading source for scroll saw patterns, cow projects, toy plans, yard ornaments, wood furniture, etc. Over 3000 hard-to-find specialty items. Send for your big new 80-page catalog. MEISEL HARDWARE SPECIALTIES. $2.00. *Circle No. 401.*

NEW DESIGNS, LAWN FURNITURE, GARDEN STRUCTURES, NEW COLOR CATALOG—Just completed rose arbor archway with seats and planters, mystic wishing well with running water, unique planters and bench combo and a beautiful garden bridge. Walk through octagon & hexagon picnic tables, patio chairs, rockers, swings, adirondack furniture, jungle gym and other real fun projects. Easy to follow plans, materials list, step by step instructions. Excellent business opportunity. SPECIALTY FURNITURE DESIGNS. $2.00. *Circle No. 445.*

WOOD TOY PATTERNS—Patterns for all ages including children's patterns and executive toys. New catalog has many new patterns to choose from including parts and wheels. Send for new catalog and receive a coupon for free wheels and axle pegs. TOYS AND JOYS. $1.00. *Circle No. 465.*

TO ORDER THESE BOOKLETS, USE COUPON ON PAGE 86

THE COMPLIMENTS NEVER END!—when you show off your completed projects made from our full size patterns. Over 1800 unique, easy to make designs include popular folkart, wind action whirligigs, old world Santas, country furniture, shelves and shadow boxes, action toys, 3D layered animals, country critters, yard ornaments, Christmas yard decorations and more! No enlarging required—just trace our patterns onto wood and cut out. Fast service, satisfaction guaranteed. Send for our latest catalog. THE WINFIELD COLLECTION. $1.00. *Circle No. 480.*

WOOD-MET SERVICES CATALOG LISTS SOME 700 PLANS—to build a wide variety of tools and accessories to equip your workshop. They vary from complete machines to hand tools, photo accessories to shop methods. Included are some 80 attachments for your lathes, drill presses & routers, over 60 hand tools, plus sander, welder, shaper, table saw accessories, etc. Others include a portable band sander, metal spinning tools, air compressor, ¾" spindle wood shaper, wood lathe & chisels & a 12-in. thickness planer. Send for catalog, order plans, build the equipment for your shop and save. WOOD-MET. $1.00. *Circle No. 496.*

LUMBER

QUALITY EXOTIC LUMBER/TURNING WOODS— We offer a comprehensive selection of fine quality exotic woods. Also available are mechanisms for making wooden barrel pens/pencils/roller balls/ fountain pens. Ebony, Kingwood, Tulipwood, Snakewood, African Blackwood, Cocobolo, Blood-wood, Figured Maple, Spaulted Maple, Padauk, etc. Unique and unusual turning woods and burls are also available. Send for catalog. BEREA HARDWOODS. $1.00. *Circle No. 510.*

THIN STOCK—We stock the thin lumber you're looking for. ¼", ¾", & ½" cherry, maple, red oak, poplar, hard maple and walnut. We also have exotics and domestic lumber. UPS bundles shipped to your door! Excellent service, satisfaction guaranteed. We accept Visa, MasterCard and Discover. Send for catalog. BRISTOL VALLEY HARDWOODS. $1.00. *Circle No. 513.*

MORE THAN 4000 WOODS,—veneers, inlays, carvings, legs, pegs, tools, mouldings, finishes, decorative hardware, plus books, plans and more—everything for people who work with wood! Constantine's 181 years of woodworking experience make it the catalog woodworkers rely on; their 60-day money-back guarantee is your assurance of 100% satisfaction. 2 year subscription. CONSTANTINE'S. $1.00. *Circle No. 515.*

STEVE H. WALL LUMBER CO—Quality hardwoods and woodworking machinery for the craftsman and educational institutions. 16-page catalog lists 17 species of popular hardwoods at wholesale prices. Also dealers for MiniMax, Freud and ProCut woodworking machines. STEVE H. WALL LUMBER CO. $1.00. *Circle No. 592.*

EXOTIC IMPORTED AND DOMESTIC HARDWOODS—Over 75 species of lumber, bowl blanks, turning squares and veneer. Samples (½"x 3"x 6") ideal for craftsmen, furniture and cabinet makers, architects, and designers available. Catalog provides common and botanical name, source, and description of each wood. Send for catalog. WOODWORKERS SOURCE. $1.00. *Circle No. 598.*

VIDEOS

LAGUNA TOOLS VIDEO—Learn why most European workshops are using a central machine center rather than separate machines. 90 min. video presentation of "The Intelligent One Man Shop. The Robland X 31". Send for video. LAGUNA TOOLS. $6.00. *Circle No. 615.*

GENERAL WOODWORKING CATALOGS

CONSTANTINE'S 181ST ANNIVERSARY CATALOG—is packed with woods, veneers, tools and supplies. Choose veneers in more than 81 varieties... inlays, overlays, hardwoods, moldings, trims, caning supplies, finishes, hardware, and tools, tools, tools! Over 4000 products, illustrated in full color and guaranteed to please or your money back. 2 year subscription. CONSTANTINE'S. $1.00. *Circle No. 820.*

THE WOODTURNERS CATALOG—48 color pages of the finest woodturning tools, machinery and supplies available. Featuring Henry Taylor, Sorby, Richard Raffan and Dale Nish workshops. Catalog price refunded with order. CRAFT SUPPLIES USA. $2.00. *Circle No. 830.*

MASTER TOOLS CATALOG—1992-93 236-page master woodworking tools catalog. Full line of the best hand tools, power tools & accessories, machinery, glues, finishing supplies, workbenches, and much more. Hundreds of books included. All four-color. Lots of technical information. GARRETT WADE CO. $4.00. *Circle No. 855.*

GRIZZLY IMPORTS, INC.—1993 is our 10th year of providing woodworkers with an incredible selection of machines, tools and accessories at prices you can afford. Send for your free 1993 catalog today and celebrate with tremendous savings on all your woodworking needs. GRIZZLY IMPORTS INC. Free. *Circle No. 860.*

VERITAS—INNOVATION IN TOOLS—Order your FREE color catalog of woodworking innovations such as the Tucker Vise, Snug Plug tapered plug cutters, sharpening systems, drilling jigs for bookshelves, 32mm construction and Euro hinges, scraper burnishers, bench hardware kits, measuring devices and much more. VERITAS TOOLS. Free. *Circle No. 953.*

COMPLIMENTARY TOOL CATALOG—Woodcraft offers over 4,000 of the finest quality woodworking tools, books, supplies, and cabinetry hardware in our complete full color catalog. Craftsmen, cabinetmakers, carvers, woodturners, and hobbyists have depended on Woodcraft since 1928. Backed by Woodcraft's unconditional guarantee. Free technical assistance. WOODCRAFT SUPPLY CORP. Free. *Circle No. 955.*

WOODWORKER'S HARDWARE CATALOG—160 pages of cabinet and furniture hardware and related items. Product categories include hinges, knobs, pulls, drawer slides, entertainment center hardware, kitchen cabinet accessories and much more. Orders ship within 36 hours. You won't be disappointed. WOODWORKER'S HARDWARE. $1.00. *Circle No. 960.*

THE WOODWORKERS' STORE CATALOG—New! The Woodworkers' Store 1992-93 catalog with over 150 new items features 100 full color pages of domestic and exotic hardwoods, veneers, wood parts, specialty hardware, kitchen accessories, finishing supplies, tools, books, and plans... Many exclusive items and hard to find specialties. Orders shipped in 24 to 48 hours. Over 37 years in business! Satisfaction guaranteed. Catalog. THE WOODWORKERS' STORE. $2.00. *Circle No. 965.*

KITS

OUR QUEEN ANNE FURNITURE KITS—are ready to assemble and finish. They include dining room table, chairs, hutch, sideboard, a variety of occasional tables, and a personal desk. All are made in solid cherry, oak, walnut, and mahogany. We also stock individual Queen Anne legs for every project. Complete information in our brochure packet. ADAMS WOOD PRODUCTS. Free. *Circle No. 1002.*

ATTENTION WOOD READERS—If you want to spend more time in your wood shop and less time shopping for wood, PROJECT-PAK is for you! Our catalog contains over 100 PROJECT-PAKs of projects originally built in WOOD Magazine. Send today and enjoy hassle free woodworking. Catalog. HERITAGE BUILDING SPECIALTIES. $1.00 (Refund w/ purchase). *Circle No. 1040.*

SHIP MODELING CATALOG—Historic Ship Models—Museum quality replicas you build yourself. Pre-cut wooden parts, metal and brass fittings, cloth sails, plans and instructions. Send for 80 page color catalog. MODEL EXPO, INC. $1.00. *Circle No. 1075.*

CANOES—Are you looking for a unique Do-It-Yourself Project? Are you tired of incomplete hard to understand instructions? Then look no further. Build a beautiful Cedar Strip Canoe following or complete instructional video. All you need are simple tools, 60–80 hours and basic woodworking experience. Send for brochure. PALEO CANOE. 50¢. *Circle No. 1083.*

BUILD YOUR OWN INDEXING ROUTER SYSTEM—Use our hardware and plans to build this exciting and versatile tool for your home shop. With your router and this powerful milling system you can build projects with professional features such as rope moulding, spiral flutes, beading, precision joinery and multi-sided cross sections. More powerful than a lathe and much easier to use. Information and newsletter. PHANTOM ENGINEERING, INC. $2.00. *Circle No. 1084.*

SHOP ACCESSORIES

NU-LIFE—is a solid abrasive belt cleaner that removes dulling abraded material which is lodged between the abrasive grains. It makes the belt look and perform like new again. Increases the cutting life of abrasive belts and discs up to 400%. Made in the U.S.A. Brochure. ABRASIVE SERVICES CO., INC. $1.00. *Circle No. 1202.*

WOOD MOISTURE METER—Insure the quality of every project by using a wood moisture meter. Delmhorst Model J-88 is ideal for a woodworking shop or the serious craftsman. Easy to read LED display indicates 10 ranges of moisture content between 6% & 20%. Send for catalog on our complete line of wood moisture meters. DELMHORST INSTRUMENT CO. Free. *Circle No. 1217.*

NEW...RADIAL ARM FENCE SYSTEM—Featured in WOOD Magazine June 92 issue "Products that Perform". Doyel Enterprises produces a precision cut-off and angle cutting fence system. Only one 90 degree cut is required on your table top (no more swiss cheese). Instantly replaces your existing wood fence. Angle accuracy less than ¼ degree and cut-off accuracy of less than 1/64 inch. Quality heavy duty extruded and machined construction. Send for literature. DOYEL ENTERPRISES. Free. *Circle No. 1225.*

LUMBER DRYING SYSTEMS—Ebac Lumber Dryers offers a wide variety of sizes from 50 B.F. to over 10,000 B.F. Three models are priced under $3000. You get the highest quality lumber dried down to 6% – 8% moisture content. Our controllers make them easy to operate and energy efficient. Kiln construction guide included to build your chamber. EBAC LUMBER DRYERS. Free. *Circle No. 1228.*

ECON-ABRASIVES—manufactures abrasive belts up to 52" wide in any grit. We carry hundreds of woodworking related accessories including: Velcro® backed discs, bar clamps, wood glue, drawer slides, chisels, hinges and hundreds of sanding accessories. Send for our 1992 catalog. ECON-ABRASIVES. Free. *Circle No. 1229.*

EXACT CUTS—Finally, a simple alignment kit that will turn your radial arm or table saw into a precision cutting tool. Make professional quality furniture, cabinets or a whole house. Send for information. EXACT CUTS. 50¢. *Circle No. 1232.*

EXCALIBUR T-SLOT SAW FENCE—& Companion Sliding Saw Table are designed as a complete system to provide greater accuracy from your table saw. Features quick, easy installation, fits all table saws. Fence locks on both front & rear guide rails. Fence always stays parallel to the saw blade. Dual measuring scales. More features & accessories than other systems. Send for free information. EXCALIBUR MACHINE & TOOL. Free. *Circle No. 1233.*

EASY DOES IT—with HTC'S power tool accessories. Discover many unique items, designed only with you, the dedicated woodworker, in mind. Make your machinery safer, increase the working area of your shop and accomplish nearly impossible tasks easily, quickly, accurately. Full-line catalog and price list. HTC PRODUCTS, INC. Free. *Circle No. 1245.*

THE ACCU-MITER—If you consider yourself a serious woodworker, this professional quality miter gauge is for you! The Accu-Miter is the perfect tool to create precise angles in a snap. The Accu-Miter's tapered shot pin assures dead-on accuracy year after year. The maximum margin of error is one minute, 43 seconds. That's less than 1/50th of a degree. That's guaranteed! Brochure. JDS COMPANY, INC. Free. *Circle No. 1246.*

INSTY*BIT—Quick-Change Drilling System—This innovative professional system changes bits instantly, without a key. Works with any power drill. Reviewed by a national magazine as "...the best thing to happen to drilling and screwdriving since electric motors." Get complete information and catalog. INSTY*BIT. $1.00. *Circle No. 1247.*

WOOD MOISTURE METER—Avoid moisture problems such as cracking, warping, splitting, delamination etc. by using a moisture meter, as described in the latest brochure. Moisture Meter Mini-Ligno is designed for serious hobbyists and woodworkers. Attachments for depth measurements and remote reading during air and kiln drying are available. Available Moisture Range 6-20%, 6-36% or 4-30%, 4-60%. Catalog describes complete line of moisture meters. LIGNOMAT USA, LTD. Free. *Circle No. 1250.*

ROUTER SPEED CONTROL—Reduces speed electronically without reducing torque. Route at the speed that gives best results with the wood and bit you are using. Speed adjustable from full speed to 0 RPM. Less tear out—stops burning—less wear on bits—easy to use. Send today for information. MLCS LTD. Free. *Circle No. 1251.*

LUMBER DRYING—Dry your own lumber using our equipment and your insulated chamber. Dehumidification systems from 300 BF to 45,000 BF. Easy to operate equipment offers high quality kiln-dried lumber for pennies per foot. These long-lasting made-in-the-USA units can pay for themselves in one month! Send for free catalog. NYLE STANDARD DRYERS, INC. Free. *Circle No. 1260.*

WOODCHUCK INDEXING ROUTER SYSTEM— Make great money part time building custom furniture. Use your router and this powerful milling system to create sophisticated furniture that would normally require a shop full of expensive equipment and custom jigs. Create rope moulding, tapers, flutes, beads, circular moulding, left and right hand spirals in different pitches as well as sizing and truing stock, distinctive mill work and precision joinery. Information and newsletter. PHANTOM ENGINEERING, INC. $2.00. *Circle No. 1265.*

WHOLESALE SANDPAPER, BELTS, SHEETS, CLOTH & PAPER DISCS—for orbital sanders. Shop rolls, flap wheels, hot melt glue sticks, dust masks, scuff pads, tack cloths, tape, wipers, etc. Supergrit offers quality abrasive and refinishing products at wholesale prices directly to the consumer. $25.00 minimum order. Prompt, free UPS shipment to most areas. 20 page catalog. RED HILL CORP. Free. *Circle No. 1267.*

PANEL SKATE—This shop dolly has a V channel to center panels and with the wheels set below the top edge flat objects can also be moved. It weighs 5 lbs, carries 1000 lbs, and fits in a tool box. This aluminum/ rubber coated BACK SAVER is only $49.95. Free literature. SHOPCARTS. Free. *Circle No. 1277.*

CONVENIENT POWER STRIP—Send for brochure and price list on the most convenient work bench power strip you will find anywhere. TAP-A-LINE PRODUCTS, INC. Free. *Circle No. 1279.*

TO ORDER THESE BOOKLETS, USE COUPON ON PAGE 86

BITS, BLADES, CUTTING TOOLS

CASCADE TOOLS—The 1993 Cascade Tools catalog is the finest ever. It's jammed with great buys on SY brand industrial-grade router bits, shaper cutters and an excellent assortment of hard-to-find accessories. You'll have to see it to believe it. CASCADE TOOLS, INC. Free. *Circle No. 1315.*

THE SOURCE FOR KNIFEMAKING SUPPLIES—We have PRE-SHAPED Blades, Rivets, Handle Materials, Baldor buffers and grinders, Polishing Wheels and Compounds, Dremel tools and Accessories, Belt Grinders and Abrasive Belts, Starrett Precision Tools, Files, Punches, Drill Bits, Panavise and Panapress, Woodcarving Tools and much more! Send for our Complete line catalog and we will include our "KNIFEMAKING PROJECT" booklet at no extra charge. JANTZ SUPPLY. $3.00. *Circle No. 1330.*

PRODUCTION QUALITY CARBIDE TIPPED ROUTER BITS—MLCS Ltd. has a new 32-page catalog featuring hundreds of high quality carbide tipped router bits, shaper cutters, the Router Speed Control, the "Merle Adjustable Corner Clamp," plus other Professional Woodworking Products. Prices 50% to 70% lower than elsewhere. Value, quality and prompt service guaranteed! MLCS LTD. Free. *Circle No. 1350.*

MAGNATE—provides a full line of affordable carbide tipped router bits and shaper cutters. Send for FREE new 1992-93 catalog. MAGNATE. Free. *Circle No. 1355.*

HARDWARE/WOOD PARTS

QUALITY OGEE FOOT MOULDING—We offer top quality hardwoods, various heights and patterns are available. These are assembled ready to install. Prices are reasonable. Send for free brochure. BLUE RIDGE MOULDING. Free. *Circle No. 1410.*

HARDWARE CATALOG—A unique 48-page catalog of the very finest in classic, traditional solid brass cabinet hardware. All of British or No. American manufacture. Double & single post handles, knobs, escutcheons, standard & specialty hinges, box hardware, brass screws, castors, latches, catches, locks, and more. GARRETT WADE CO. $3.00. *Circle No. 1427.*

INCOME OPPORTUNITIES

MAKE MONEY IN FURNITURE RESTORATION THE MINUTEMAN WAY—Earn $200-$1000 per day stripping, repairing, refinishing, mirror resilvering, and/or veneering, at home or in shop, spare time or full time. We provide complete training; no experience necessary. Free workshop teaches you latest in furniture restoration. You have to see it to believe it! Business preview video $19.95. Send for catalog. MINUTEMAN. $2.00. *Circle No. 1661.*

MISCELLANEOUS

MECHANISMS FOR MAKING WOODEN BARREL PENS—Pencils/Roller Ball Pens/Fountain Pens. High quality. Low prices. Wholesale/Retail. Plus other related items. BEREA HARDWOODS CO. $1.00. *Circle No. 1900.*

DELPHI STAINED GLASS—80-page color catalog of stained glass and related supplies. Beveled glass, hard-to-find tools, hundreds of unique patterns, kits, books, videos, and lots more. For 18 years, we've supplied both hobbyists and professionals with quality products, friendly advice, and fast 24-hour shipping. All products guaranteed 100%. DELPHI STAINED GLASS. $4.50. *Circle No. 1920.*

ARMRESTS FOR YOUR CAR—Add a TracTop® sliding cushion front center armrest with pullout tray. Models for foreign and domestic bucket seat cars, Honda, Saab, Audi, Ford, GEO, Volvo, etc. Color choices. #1 worldwide for 12 years! HUSCO ENGINEERING. $1.00. *Circle No. 1960.*

SUPER BINDER—stops cord hassle. Strong nylon loop attaches to item. Wrap 2-ply Velcro strap around coil either way to secure. Pull thumb tab to release. Weatherproof. Durable. Send for free brochure. MEGAMARK PRODUCTS CO. Free. *Circle No. 1980.*

HI-TECH ENGRAVING—You don't have to be an artist with the System One High Speed Engraver (400,000 RPM). The incredible high speed combined with SCM's exclusive stenciling system allows you to produce professional results. You can engrave on wood, glass, metal, stone, ceramic, egg shell. It's as easy as writing with a pen. Send for information. SCM ENTERPRISES. $1.00. *Circle No. 1990.*

STEELMASTER BUILDINGS—are available in almost any size for almost any use. From 10'to 100'wide and any length imaginable. Whether you need a back yard shop... an industrial shop... equipment storage building... whatever your requirements, you'll find a Steelmaster that's just the right size for the job. Our buildings are so easy to construct, most owners opt to construct their buildings themselves which adds up to even bigger savings. Send for information. STEELMASTER. $1.00. *Circle No. 2030.*

UNICORN STUDIOS—the woodworker's complete source for musical movements, features many types of wind-up and electronic musical movements and one of the largest selections of tunes anywhere. Many unique or hard-to-find tunes. Send for a full-line catalog. UNICORN STUDIOS. $1.00. *Circle No. 2060.*

IF YOU ARE INTERESTED IN RESTORING ANTIQUES—this 264-page catalog packed with unusual, hard-to-find items is just for you. Included are hundreds of essential items for antique restoration including top quality brass reproduction hardware, oil lamps and accessories, numerous wood component repair parts and kits, caning and basketry supplies, everything needed for wood refinishing, related tools, books, and a complete line of upholstery equipment and supplies. All at wholesale prices. Send for this informative catalog. VAN DYKE'S RESTORERS. $1.00. *Circle No. 2077.*

LEGAL IVORY—Virtually identical to animal ivory. Tagua is the nut from a tropical palm tree. Ideal for jewelry, knobs, small turnings, inlay, or scrimshaw. Available in 3 sizes. Send for information. WOODWORKERS SOURCE. Free. *Circle No. 2090.*

***THE WOODWORKING SHOWS* MACHINERY, TOOLS AND SUPPLIES**—Hundreds of products for the woodworker demonstrated and sold at discount prices at every *Woodworking Show*. In-depth seminars and free workshops on a variety of woodworking topics. Shows are scheduled in 27 cities. Send for free brochure. *THE WOODWORKING SHOWS*. Free. *Circle No. 2095.*

CARVING SUPPLIES

WOOD CARVING MACHINES AND ACCESSORIES— make all types of wood carving easy, fun and profitable. The machines do the work. Whether for sign carving, flat 3-D, decoys, panels, gun stocks or furniture, we have the proper machine for the job. Professional woodcarving for the hobbyist and superior quality for the professional. Begin your hobby or full or part-time business by ordering our catalog and price list. MARLIN INDUSTRIES. $1.00. *Circle No. 2150.*

WOODCARVING TOOLS—Whittlers and carvers— Warren Tool Co. offers a complete catalog of whittling and carving, hand/power tools, sharpening aids, wood cut-outs, and related wood carving supplies. WARREN TOOL CO., INC. $1.00. *Circle No. 2185.*

CARVING FACES START HERE—Whether you are an accomplished woodcarver with a desire to further your trade, or a novice carver looking for a place to start, Bill White's handy detailed, easy-to-follow, step-by-step teaching guide and a few simple tools are all you need. You will soon be carving intricate detailed faces with techniques you can use over again. Send for information. BILL WHITE TEACHING AID. $1.00. *Circle No. 2187.*

CLAMPS

MERLE ADJUSTABLE CORNER CLAMP—Quick & easy to use. It forces your work into square. Fully adjustable from 2⅝"x 2⅝"to 69"x 69"in. Perfect for clamping picture frames, cabinets, or anything that requires 90° corner clamping. The Merle Clamp is cast aluminum & steel construction, a true industrial quality tool. Send today for information. MLCS LTD. Free. *Circle No. 2250.*

VACUUM PUMPS for CLAMPING and VENEERING— low cost air-powered VAK Pumps for vacuum clamping, CNC, templet, hand routing. Fast and strong, eliminate the cost and interference of mechanical clamps. Make unique VAK clamps for holding 2 pieces at right angles, butt joints and jointing with a router. VAK Pump used with vacuum bag for **veneering curved, flat, unique shapes and bent laminations**. Complete kits start at $99 each. QUALITY VAKuum PRODUCTS, INC. $1.00. *Circle No. 2262.*

CLOCKS

KLOCKIT'S FREE 64-PAGE COLOR CATALOG—is packed with the largest selection of beautiful wood clock kits for all skill levels, a huge selection of quartz and mechanical clock movements, dials and accessories, turned wood parts, music movements, tools and much more for the craftsman! KLOCKIT. Free. *Circle No. 2335.*

FASTENING PRODUCTS

SQUARE DRIVE SCREWS—Thousands agree— once you try them you will never want to use anything else! The square drive recess virtually eliminates work-damaging driver bit "cam-out," the deep threads result in exceptional holding power, and they are heat treated for strength. Sizes from #4 x ⅜"to #12 x 4", with stainless steel, solid brass, brass plated, and zinc plated available. Quantity discounts. Send for literature. McFEELY HARDWOODS. $1.00. *Circle No. 2450.*

Better Homes and Gardens®
WOOD Magazine, February 1993
Dept. FEWO93
P.O. Box 2713
Boulder, Colorado 80329–2713

TO ENSURE PROMPT HANDLING OF YOUR ORDER FOLLOW THESE INSTRUCTIONS:

- **Circle your choice**
- **Enclose check or money order for cost of booklets plus $2.00 service charge (no stamps accepted)**
- **NO FOREIGN ORDERS ACCEPTED**
- **Send coupon and remittance to address above**
- **ALLOW 4-6 WEEKS FOR DELIVERY**
- **Coupon expires March 12, 1994**

WOOD SUBSCRIPTION

1. A 1 year WOOD subscription (9 issues) for $24.97 (U.S. price)—a $10.58 savings off newsstand rate. Allow 6-8 weeks for first issue. Be sure to include payment with total below. NO FOREIGN ORDERS ACCEPTED ON THIS COUPON; please contact Subscription Dept. directly.

Circle numbers below corresponding to items in this issue. Please include $2.00 for handling charge.

3.....$2.00	88.....$1.00	355.....$8.00	830.....$2.00	1225 .....Free	1279 .....Free	2060.....$1.00
4.....$1.00	90 .....Free	377.....$1.00	855.....$4.00	1228 .....Free	1315 .....Free	2077.....$1.00
6.....$3.00	92.....$1.00	401.....$2.00	860 .....Free	1229 .....Free	1330.....$3.00	2090 .....Free
8.....$2.00	93.....$1.00	445.....$2.00	953 .....Free	1232.....50¢	1350 .....Free	2095 .....Free
10 .....Free	94.....$2.00	465.....$1.00	955 .....Free	1233 .....Free	1355 .....Free	2150.....$1.00
37.....$1.00	96.....$1.00	480.....$1.00	960.....$1.00	1245 .....Free	1410 .....Free	2185.....$1.00
44 .....Free	98 .....Free	496.....$1.00	965.....$2.00	1246 .....Free	1427.....$3.00	2187.....$1.00
48.....$1.00	142 .....Free	510.....$1.00	1002 .....Free	1247.....$1.00	1661.....$2.00	2250 .....Free
75 .....Free	160.....$1.00	513.....$1.00	1040.....$1.00	1250 .....Free	1900.....$1.00	2262.....$1.00
76 .....Free	175.....$1.00	515.....$1.00	1075.....$1.00	1251 .....Free	1920.....$4.50	2335 .....Free
77 .....Free	190.....$1.50	592.....$1.00	1083.....50¢	1260 .....Free	1960.....$1.00	2450.....$1.00
78.....$1.00	310.....$2.00	598.....$1.00	1084.....$2.00	1265.....$2.00	1980 .....Free	
84 .....Free	328.....$1.00	615.....$6.00	1202.....$1.00	1267 .....Free	1990.....$1.00	
87 .....Free	345.....$3.00	820.....$1.00	1217 .....Free	1277 .....Free	2030.....$1.00	

Name (please print)_____
Address_____
City_____
State_____ Zip Code_____
Phone (Optional): ___ _____

I AM ENCLOSING:

$_____ for priced items
$ 2.00 for handling
$_____ total remittance

ORDER 1-800-328-0457 MAIL ORDER HOURS M-F 7:00-5:30 C.S.T. SAT 8:00-1:00

DELTA TOOLS

Model		List	Sale
23-700	Wet/Dry Grinder	234	159
23-680	6" Bench Grinder 1/4 HP	86	75
23-880	8" Bench Grinder 1/2 HP	151	115
11-950	8" Drill Press	199	144
31-050	1" Belt sander 2.0 amp	104	78
31-460	4" Belt/Disc Sander	198	135
31-340	1" Belt/8" Disc Sander	268	188
31-080	1" Belt/5" Disc Sander	134	94
40-560	16" 2 speed Scroll Saw	266	179
11-990	12" Bench Drill Press	276	209
11-090	32" Radial Bench Drill Press	399	285
43-355	3/4" Shaper 1-1/2 HP	964	709
43-505	1/2" Bench Router/Shaper	399	279
22-540	12" Bench Top Planer	595	389
36-220	10" Compound Mitre Saw	350	239
28-180	Bench Band Saw	232	167
40-640	20" Bench Scroll Saw	466	319
23-675	NEW 6" Grndr/3x24Belt Sndr	141	105
14-600	Hollow Chisel Mortiser	668	445
46-700	12" Wood Lathe	548	419
34-761	10" Unisaw 1-1/2 HP	1715	1295
	Unisaw has $100 rebate-price is before rebate		
33-990	10" Radial Arm Saw	818	589
37-280	6" Motorized Jointer	488	395
50-179	3/4 HP 2 stage Dust Collector	483	335
70-200	20" Floor Drill Press	1049	815
33-055	8-1/4" Sawbuck comp w/legs	865	579
34-330	8-1/4" Table Saw 13A	343	228
32-100	Station Plate Jointer	645	265
36-040	8-1/4" Compound Mitre Saw	224	165
34-915	30" Unifence	385	239
34-897	50" Delta Unifence	525	285
36-755	10" Tilt Arbor Saw	1264	935
34-444	Contractors Table Saw	850	615
17-900	16-1/2" Floor Drill Press	495	395
40-601	18" Scroll Saw with stand	942	719
22-662	13" Planer complete - 2HP	1499	1169
33-060	NEW "Sidekick" Miter Saw	499	379
14-070	NEW 14" Floor Drill Press	450	325
50-075	Dust Collector/Sweeper 3/4 HP	360	245

The following Delta tools have a $50.00 Rebate! Price shown is before rebate.

28-283	14" Band Saw w/enc. stand	910	725
34-445	34-444 Saw w/30" Unifence	1200	769
37-154	DJ15 6"Jointer w/3/4HPmotor	1420	1079

MILWAUKEE TOOLS

6527	NEW Sawzall with case	299	164
6528	above Sawzall w/wired cord	295	164
6125	NEW 5"Random Orbit Sander	200	119
6126	NEW 6"Random Orbit Sander	205	125
0399-1	12V cordless Drill Kit comp	304	164
0402-1	above Drill w/keyless chuck	309	168
0395-1	9.6V cordless Drill with case	284	158
0224-1	3/8" Drill 4.5 amp magnum	203	114
0234-1	1/2" Drill 4.5A mag 0-850 rpm	223	119
0244-1	1/2" Drill 4.5A mag 0-600 rpm	223	119
0222-1	3/8" Drill 3.5 amp 0-1000 rpm	189	107
0228-1	3/8" Drill 3.5 amp 0-1000 rpm	183	104
0375-1	3/8" close quarter Drill	223	127
0379-1	1/2" close quarter Drill	254	145
6539-1	cdls Screwdriver 190 rpm	127	75
6546-1	cdls Scrwdvr 200 & 400 rpm	138	82
5399	1/2" D-hdle Hammer Drill Kit	319	184
6750-1	Drywall Gun 0-4000 5 amp	162	93
6507	Original SawZall with case	249	135
6014	Orbital Sander 1/2 sheet	214	118
8977	variable temp. Heat Gun	122	74
5397-1	3.8" var. spd Hammer Drill Kit	244	138
5371-1	1/2" var. spd Hammer Drill Kit	335	185
3107-1	1/2" v/spd right angle Drill Kit	370	198
6754-1	Drywall Gun 0-4000 5.4 amp	192	108
3300-1	1/2" var. spd right angle Drill	329	184
5680	Router 2 HP - 12 amp	355	198
0235-1	1/2" Drill w/keyless chuck	223	125
6145	4-1/2" Grinder 10,000 rpm	162	98
6142	6145 with case & accessories	199	129
6749-1	Drywall Gun 0-2500 5.4 amp	224	122
6365	7-1/4" Circular Saw 13 amp	214	120
6366	6365 w/fence & carbide blade	224	125
6368	6365 w/fnce,carb. blde,& cse	244	138
6369	New 7-1/4 Circ saw w/brake	245	149
6377	7-1/4" Worm Drive Saw	324	178
6256	Top Handle Jig Saw	220	142
6490	10" Mitre Saw	444	269

FREUD CARBIDE TIPPED SAW BLADES 5/8" Bore - Industrial Grade

Item	Description	Teeth	List	Sale
LU72M010	Gen Pur. A.T.B.	10° 40	67	37
LU82M010	Cut-off	10° 60	90	49
LU84M011	Comb	10° 50	76	40
LU85M010	Super Cut-off	10° 80	112	58
LM72M010	Ripping	10° 24	66	38
LU73M010	Cut off	10° 60	82	44
LU87M010	Thin Kerf	10° 24	70	38
LU88M010	Thin Kerf	10° 60	86	43
LU98M010	Ultimate	10° 80	125	67

Buy a LU85M010,LM72M010,& LU84M011 blade set for 128.00 and receive a FREE one year subscription to BHG WOOD Magazine!

TK206	10" Framing	24	38	25
TK303	7-1/4" Finishing	40	37	22
TK306	10" Finishing	40	46	25
TK906	10" Combo	50	52	29
SD306	6" Dado - Carbide		215	109
SD308	8" Dado - Carbide		229	119
F0	1-3/4" x 5/8" Biscuit 1000 Qty		32	29
F10	2-1/8" x 3/4" Biscuit 1000 Qty		32	29
F20	2-3/4" x 1" Biscuit 1000 Qty		34	29
FA	Assorted Biscuits 1000 Qty		34	29
FB100	16 piece Forstner Bit Set		331	174
94-100	5 pc. Router Bit Door System		319	165
FT2000E	3-1/4 HP v/spd Plunge Router		410	199
JS100	Biscuit Jointer with case & FREE G100 Glue System		334	162

MAKITA TOOLS

Model		List	Sale
6070DW	3/8" v/spd Reverse Drill 7.2V	124	74
6071DWK	above Drill w/removable batt	194	109
5090DW	3-3/8" Saw Kit 9.6 volt	250	138
6010SDW	3/8" cordless Drill Kit 7.2V	96	59
ML900	Incandescent Flashlight 9.6V	Sale	37
6093DW	v/spd Drill w/clutch-complete	261	135
6093DWE	6093DW Drill Kit w/2 batteries	270	139
6095DWE	6095DW Drill Kit w/2 batteries	270	139
6011DW	NEW 12V Drill Kit complete	320	168
632007-4	9.6 volt Battery	47	30
632002-4	7.2 volt Battery	39	28
5007NBA	7-1/4" Saw w/electric brake	243	129
5008NBA	8-1/4" Saw w/electric brake	301	163
B04510	1/4 sheet Pad Sander	93	54
9900B	3" x 21" Belt Sander w/bag	283	148
9924DB	3" x 24" Belt Sander w/bag	299	159
4301BV	Orb. var. spd Jig Saw 3.5A	262	142
JR3000V	var. speed Recip Saw w/case	239	129
LS1020	10" Mitre Saw 3.5 amp	571	299
9820-2	Blade Sharpener	394	194
1900BW	3-3/4" Planer with case	221	116
1911B	4-3/8" Planer 7.5 amp	255	139
9207SPC	7" Sander/Polisher	294	154
9514B	4" Disc Grinder 4.6 amp	100	65
3601B	1-3/8 HP Router	261	139
B04550	1/4 sheet Pad Sander w/bag	91	54
DA3000R	3/8" Angle Drill	285	149
2708W	8-1/4" Table Saw	519	265
2711	10" Table Saw with brake	868	485
6404	3/8" Drill Rev. 0-2100 rpm 2 A105		57
6510LVR	3/8" Drill Rev. 0-1050 rpm	152	79
6820V	0-4000 rpm Drywall Gun 5.2 A160		89
6013BR	1/2" Drill Rev. 6 amp	263	138
5402A	16" Circular Saw 12 amp	675	345
3612BR	3 HP Plunge Router	347	169
9401	4" x 24" Belt Sander w/bag	343	174
4302C	var. speed Orbital Jig Saw	283	154
5077B	7-1/4" Hypoid Saw	260	138
LS1030	NEW 10" Mitre Saw	428	215
5007NB	7-1/4" Circular Saw 13 amp	214	114
2012	12" Portable Planer	913	465
LS1011	10" Slide Compound Saw	859	439

SIOUX TOOLS

8030	New 3/8" var/spd Drill	238	148
8000	3/8" var/spd close qtr Drill	201	128
690	5" Air Random Orbit Sander	139	138
690VV	690 w/venturi dust collection	281	178
658	5" Air Rndm Sander-dual action	261	158

SENCO AIR NAILERS

SFN1	Finishing Nailer 1" - 2"	377	275
SFN2	Finish. Nailer 1-1/2" - 2-1/2"	571	395
SN325	Nailer 1-7/8" - 3-1/4"	665	455
SN4	General purpose 2" - 3-1/2"	685	468
SLP20	New Pinner w/cse 5/8" - 1-5/8"	399	285
SKS	Stapler 5/8" - 1-1/2"	351	255

BOSTITCH AIR NAILERS

N80S-1	Stick Nailer Super Sale		365
N12B-1	Coil Roofing Nailer	845	405
N60FN-2	Finishing Nailer	625	355
T31	Brad Nailer	270	149
CWC100	1 HP Pancake Compressor	445	295

EXCALIBUR Fences & Tables

TT45R24L9	24" Fence	369	299
TT45R50L12	50" Fence	399	329
EXSLT30	Sliding Table	599	475
EXSLT60	Sliding Table	745	585

SKIL SIZZLERS

77	7-1/4" Worm Drive Saw	230	144
2735-04	12 volt cordless Drill Kit	210	132
2735-04X	2735-04 with keyless chuck	235	132
1605-02	NEW Biscuit Jointer w/case	200	125
3400	10" Table Saw - Bench Top	250	179
3330	16" Scroll Saw - Bench Top	200	135
3380	8" Drill Press - Bench Top	200	135

PANASONIC CORDLESS

EY6205BC	NEW variable speed 12 volt Drill w/15 minute charger & case	390	179
EY6281BC	NEW variable speed 9.6 volt Drill w/15 minute charger & case	350	168
EY571B	var. speed 9.6 volt Drill Kit	239	128
EY571BC	EY571B with case & 2 batt	275	145
EY6207BC	NEW 12 volt 1/2" Drill w/keyless chuck var. speed w/15 minute charger & case	421	218
EY6205EQK	Same as EY6205BC but battery has 40% more life & 20% more torque	368	198

PASLODE IMPULSE GUNS

IM250	Trimpulse Finish Nailer Kit	849	615
IM325	Impulse Framing Nailer Kit	849	615
402500	Extra Battery	Sale	42.95

HITACHI TOOLS

C7SB	7-1/4" Circular Saw	214	109
C7BD	7-1/4" Circular Saw with brake	230	127
M12V	NEW 3 HP var. speed Router	447	225
TR12	Plunge Router 3 HP	354	174
F1000A	12" Planer/6" Jointer	2835	1535
C10FA	10" Deluxe Mitre Saw	538	274
C12FA	NEW 12" Mitre Saw	632	305
C8FB	8-1/2" Slide Compound Saw	899	445
FREUD LU91M008	8-1/2" Carb bld 48 t	.68	43
C15FB	15" Mitre Saw	745	379
FREUD LU85M015	15"c/bld 108 tooth	180	105

We now stock Hitachi Air Nailers!

1993 TOOL CATALOG AVAILABLE
Call Toll-Free 1-800-328-0457 In Minn. Call (612)224-4859
FAX: (612)224-8263
CHECK • MONEY ORDER • VISA • MASTERCARD • DISCOVER

SEVEN CORNERS ACE HDW. Inc.
216 West 7th St. • St. Paul, MN 55102 • Est. 1933

TOOLS ON SALE™
AMERICA'S LOWEST PRICED TOOLS
FREE FREIGHT TO THE
48 CONTINENTAL STATES ON EVERY ITEM
PRICES SUBJECT TO CHANGE WITHOUT NOTICE

Buy any 2 Power Tools - (can be assorted) Deduct additional 3% from Sale prices!

Buy any 5 Power Tools - (can be assorted) Deduct additional 5% from Sale prices!

DELTA #34-080 10" MITRE BOX XTRA SPECIAL 198.00

DEWALT TOOLS

DW364	7-1/4" Circ. Saw w/brake 13 A	245	148
DW945K	3/8" 12 volt cordless Drill Kit with 2 batteries	284	169
DW944K	3/8" 9.6 volt cordless drill kit with 2 batteries	264	149
DW610	1-1/2 HP 2 handle Router	250	138
DW411	1/4 sheet Palm Sander, 1.7 amp	87	54
DW100	3/8" Drill, 4 amp,0-2500 rpm,rev	110	65

PORTA NAILER

401	Porta Nailer complete	265	198
501	Face Nailer complete	265	195

WERNER LADDERS

6204	4' Fiberglass	179	65
6205	5' Fiberglass	199	75
6206	6' Fiberglass	215	80

WINTER KIT SPECIALS

9852K	Porter Cable 9852 Drill Kit w/extra batt	185	
9853K	Porter Cable 9853 Drill Kit w/extra batt	165	
7334K	Porter Cable 5" Random Orbit Sander with case & 1 roll 100X & 150X discs	253	149
7335K	Porter Cable 5" var. spd Random Orbit Sndr w/cse & 1 roll 100X & 150X discs	273	159
7336K	Porter Cable 6" var. spd Random Orbit Sndr w/cse & 1 roll 100X & 150X discs	278	165
555K	Porter Cable Plate Biscuit Jointer with case & 1000 assorted biscuits	339	195
JS100K	Freud Jointer w/cs & 1000 biscuits	351	188
1581VSK	Bosch Top Handle Jig Saw with case & 30 Bosch blades	305	182
1582VSK	Bosch CLIC Barrell Grip Jig Saw with case & 30 Bosch blades	305	182
JM100KK	Ryobi Joiner w/1000 biscuits	475	232

BIESMEYER FENCES

B-50	50" Commer. Saw Fence	329	295
T-SQUARE 52	52" Homeshop Fence	249	235
T-SQUARE 40	40" Homeshop Fence	242	209

WEDGE SMART LEVEL

SM-PR2	2 FT Level with sensor	120	88
SM-PR4	4 FT Level with sensor	150	105
SM-PR6	78" Level with sensor	180	139
SERIES200	NEW 2FT Level with sensor		55

Msx636 FEIN Electric Oscillating Triangle Sander Kit Sale 279

LPN672 PONY Air Palm Nailer w/glove Sale 94.99

JORGENSEN ADJUSTABLE HANDSCREWS

Item#	Jaw Length	Open Cap	List	Sale	Box of 6
#0	8"	4-1/2"	19.00	11.89	61.00
#1	10"	6"	21.76	12.89	70.65
#2	12"	8-1/2"	24.95	14.95	80.95
#3	14"	10"	31.61	18.95	104.95
#4	16"	12"	42.30	24.95	143.95

JORGENSEN STYLE 37 2-1/2" Throat 1/4"x3/4"

Item#	Jaw Length	List	Sale	Box of 6
3706	6"	9.86	6.25	34.75
3712	12"	10.92	6.75	37.75
3718	18"	12.05	7.25	40.75
3724	24"	13.16	8.19	43.75
3730	30"	14.70	9.10	49.75
3736	36"	16.05	10.19	55.75

PONY CLAMP FIXTURES

Model		List	Sale	Lots of 12
50	3/4" Black Pipe Clamps	13.61	7.89	84.99
52	1/2" Black Pipe Clamps	11.37	6.50	69.50

BOSCH

1581VS	Top Handle Jig Saw	265	135
1582VSC	NEW CLIC Barrell Jig Saw	265	135
	Bosch Metal Case for above Jig Saws	34	32
	Bosch 30 blade assortment for Jig Saws		26.99
1942	Heat Gun 600° - 900°	111	69
1272D	3" x 24" Belt Sander with bag	329	178
1273D	4" x 24" Belt Sander with bag	345	189
11-212VSR	Bulldog 3/4"SDS Rtry Drill	370	199
1347AK	4-1/2" Grinder w/case & access.	170	108
1348AE	5" Grinder 8.5 amp	195	118
1194VSR	1/2" var. speed Hammer Drill	264	145
1194VSRK	above Hammer Drill w/case.	292	179
1608	5.6 amp Laminate Trimmer	149	84
1609K	Lam Installers Kit with 1609	309	175
1609KX	Deluxe Installers kit	361	198
1601	1 HP Router	184	105
1602	1-1/2 HP Router	215	135
1603	1/2 HP D-handle Router	252	145
1604	1-3/4 HP 2 Handle Router	236	125
1604K	same as above w/cse & acc	287	165
1606	1-3/4 HP D-handle Router	273	158
3258	3-1/4" Planer w/blade guard	239	139
3258K	3258 Planer with steel case	265	154
3270D	3" x 21" Belt Sander with bag	260	145
1273DVS	var. spd 4" x 24" Belt Sander	370	193
1614	NEW 1HP Plunge Router	220	128
1614EVS	NEW 1-1/4HP v/spd Plge Rtr.	255	149
1613	NEW 1-3/4 HP Plunge Router	286	164
1613EVS	NEW 2HP v/sp Plunge Router	320	184
1615	NEW 3 HP, Plunge Router	395	228
1615EVS	NEW 3 HP v/spd Plge Router	460	244
1632VSRK	Recip Saw 8.4A orb-v/spd	225	139
3050VSRK	9.6V cdls v/sp Drill Kit comp	256	138
3051VSRK	3050VSRK w/keyless chuck	266	145
1370DEVS	6" Random Orbit Sander	481	219
3283DVS	5" Random Orbit Sander	159	98
3283DVSK	3283DVS Kit complete	220	119

ELU BY BLACK & DECKER

Model		List	Sale
3338	2-1/4 HP v/spd Plunge Router	427	255
3304	1 HP var. spd Plunge Router	292	164
3375	3-1/8" Univ. planer 7.2 amp	313	155
3380	Biscuit jointer with case	542	248
4024	3 x 21 var. speed Belt Sander	322	184

BLACK & DECKER

1166	3/8" Drill 0-2500 rpm 4 amp	100	65
1703	10" Mitre Saw w/73-770 blde	313	179
4011	1/4 sheet Palm Sander	82	59
79-034	Workmate 400	175	105
2694	7-1/4" Super Saw cal	248	137
2695	8-1/4" Super Saw cal	271	153

DAVID WHITE

LP6-20	Sight Level package - 20x	310	198
L6-20	Meridian Level - 20x	290	189
LT8-300	Level Transit - 26x	650	445
LT8-300P	above Level w/optical plum	769	525
LT6-900	Level Transit - 20x	389	245
ALT6-900	Automatic Level - Transit - 18x	549	385
ALTP6-900	above Level w/tripod & rod	600	438
ALP6-18HD	above Level w/tripod and rod	550	372

RYOBI SPECIALS

JP-155	6-1/8" Jointer/Planer	611	295
TS-254	NEW 10" Mitre Saw	397	198
TS-254K	above Saw with acc. kit & B&D 73-770 carbide blade	495	245
AP10	10" Surface Planer 13 amp	820	355
RE600	3 HP Plunge Router	431	209
BE321	3" x 21" var. spd Belt Sander	272	135
SC160	NEW 16" Bench Scroll Saw	261	144
TFD220VRK	12V cordless Drill Kit	325	165
JM100K	NEW Biscuit Jointer w/case	431	204
RS115	NEW4-1/2"v/sp Rdm Orb Sndr	134	74
BT3000	NEW 10" Table Saw	699	545
TSS220	NEW 8-1/2" Slide Comp. Saw	790	445
DS1000	NEW Detail Sander	80	59
RS112	NEW Palm grip Random Orb Sndr	80	59
AP12	NEW 12" Bench Planer	840	425

LAMELLO BISCUIT JOINTERS

TOP 10	"Simply the Best"	699	559
STANDARD 10	"Professionals Choice"	499	399
COBRA	NEW Biscuit Joiner	Special	299

QUAL-CRAFT PRODUCTS

2200	Pump Jack	79	58
2201	Pump Jack Brace	30	20
2203	Pump Jack guard rail holder	31	21
2204	Workbench & rail holder combo	53	39
	Buy any 6 (can be assorted) deduct additional 10%		
2601	Wall Jack	167	114
	Lots of 4 deduct additional 10%		

PORTER CABLE

690	1-1/2 HP Router 8 amp	240	134
9690	690 Router with steel case	305	149
691	1-1/2 HP Router D-handle	260	149
695	1-1/2 HP Router/Shaper	335	204
696	HD Shaper Table	185	123
351	3" x 21" Belt Sander w/o bag	245	143
352	3" x 21" Belt Sander with bag	255	144
360	3" x 24" Belt Sander with bag	330	182
361	3" x 24" Belt Sander w/o bag	310	175
362	4" x 24" Belt Sander with bag	345	188
363	4" x 24" Belt Sander w/o bag	330	185
315-1	7-1/4" Top Hdle Circular Saw	210	118
9315-1	315-1 comp. w/cs & carb bld	240	137
617	7-1/4" Pushhandle Saw	210	119
9617	617 comp. w/cse & carb blde.	240	137
314	4-1/2" Trim Saw	240	135
97751	1/2" v/spd Hammer Drill w/cse	260	155
9629	Recip Saw var. speed 8 amp	250	144
9118	Porta Plane Kit 7 amp	360	199
505	1/2 sheet Pad Sander	210	116
6611	3/8" var. speed Drill 5.2 amp	200	113
6614	1/2" var. speed Drill 0-750 rpm	210	118
6615	7514 with keyless chuck	215	124
7549	Top handle Jig Saw 4.8 amp	250	145
330	Speed Block Sander 1/4 sheet	103	58
555	Plate Biscuit Jointer with case	315	168
345	6" Saw Boss 9 amp	180	104
9345	345 comp. w/cse & carb blde	210	124
9647	TIGER CUB Recip. Saw	195	115
9637	Full var/spd Recip Saw 8 amp	250	138
7519	3-1/4 HP Router 2 Handle	410	224
7518	3-1/4 HP 5 speed Router	475	259
7538	3-1/4 HP Plunge Router	410	224
7399	5.6 amp Drywall Cutout Unit	140	85
7310	5.6 amp Laminate Trimmer	150	88
97310	Laminate Trimmer Kit comp	345	192
7334	5" Random Orbit Sander	210	119
7335	5" var. spd Rndm Orbit Sndr	230	129
7336	6" var. spd Rndm Orbit Sndr	235	134
73333	NEW Dust Collection system		24.50
693	1-1/2 HP Plunge Router Base	295	165
6931	Plunge Router Base	120	75
7539	3-1/4HP var/spd Plunge Router	475	262
9852	12V 3/8"Drill w/cse 0-1000rpm	270	149
9853	9852 with keyless chuck	270	149
9854	12V 1/2" Drill w/cse 0-360 rpm	280	159
8500	12V battery for above drills	Sale	39
	New Tools by Porter Cable		
332	Palm Grip Rndm Orbil Sander	109	64
333	above Sander with dust bag	125	74
352VS	3x21 Belt Sander w/bag v/spd	280	164
7116	24" Omni Jig	470	305
334	333 Sander with PSA pad	125	74
550	Pocket cutter with case	330	185
7700	10" "Lazerloc" Miter Saw	634	345

FREE FREIGHT TO THE CONTINENTAL STATES ON EVERY ITEM • GIFT CERTIFICATES NOW AVAILABLE

SOMETHING FISHY IN FLORIDA

First Place and Best of Show in the 1992 Global Carving Challenge-Aquatic Life competition was a life-sized northern in native habitat. It was entered in the realistic category by Montanan Clark Schreibeis.

Last spring, woodcarvers from around the nation vied for $10,000 in prizes at the first Global Carving Challenge-Aquatic Life competition. Held in Norfolk, Virginia, the unusually focused event drew 100 entrants.

"The goal of the competition was to foster increased awareness of aquatic life by capturing its spirit in carvings," says show coordinator Deborah Effrem. The sponsor, Woodcarvers Supply, Inc., of Englewood, Florida, has set March 26–28 as the date of the 1993 competition and has changed the site to the hospitable climate of Sarasota, Florida's Airport Marina Holiday Inn. According to Effrem, the amount of prizes will be increased to $15,000. Entrants do not have to be present. For more information on the competition, write: *The Global Carving Challenge-Aquatic Life, P.O. Box 7500, Englewood, FL 34295-7500, or call 1/800-284-6229.*

MOST TIMBER GOES UP IN SMOKE

The United Nations Food and Agricultural Organization calculates that developed nations use 80 percent of the timber they harvest for lumber and paper pulp. But it's quite the opposite in lesser developed nations, where 80 percent of all timber goes for fuel.

The oldest of the old...

Trees rank as the largest and oldest life forms. Their origins go back some 200 million years. The oldest single tree resides in California. It's a 4,700-year old bristlecone pine called Methuselah.

...And the largest of the large

The world's largest living thing, the General Sherman giant sequoia, in California, weighs more than 1,400 tons. That's equivalent to the weight of 360 elephants.

WHERE THE WOOD GOES

U.S. Forest Service statistics say that new home construction accounted for 50 percent of all lumber consumed in the U.S. in 1989. Remodeling and repair of existing homes used 20 percent. Other construction—including homes, woodworkers' projects, but principally furniture manufacturing—required another 20 percent. The remaining lumber went for shipping pallets and containers.

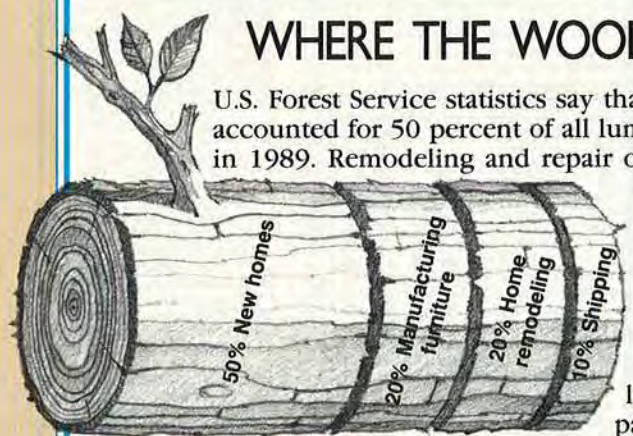

Illustrations: Jim Stevenson

NOW! PLANE, MOLD, SAND and SAW with *Infinitely Variable Power-Feed!*

MAKES YOU MONEY... SAVES YOU MONEY!

Put this versatile power-feed tool to work in your shop . . . see how fast it pays for itself! Quickly converts low-cost rough lumber into valuable finished stock. Turns out perfect picture frame moldings, quarter-round, casing, tongue and groove . . . all popular patterns . . . any custom design.

Just a twist of the dial puts twice as many cuts-per-inch at your fingertips as any comparable planer – from 70 to over 1,000 CPI! This heavy-duty machine will sail through even the toughest oak at higher speeds, or you can slow it down to handle those "hard-to-work" pieces like curly maple, knotty cedar, burls, knees and much more! A valuable feature for molding work, where profiles make sanding impossible.

Change to Molding, Sanding or Sawing in just minutes! Unique "Morse-Taper" Quick Change Cutterhead guarantees fast changeover . . . bearings remain factory set . . . precisely aligned at all times.

Now choose from three powerful models! Woodmaster introduces the first 18″ and 25″ Planer/Molders . . . with all the features that have made the 12″ model the most versatile Planer/Molder on the market! Send for Free Facts today!

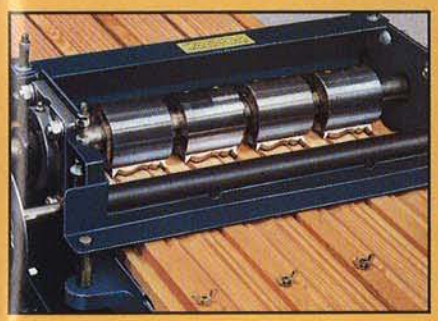

Woodmaster's Quick-Change Molding Head lets you create custom moldings from any stock. Choose from over 250 standard trim and picture frame patterns . . . or design your own!

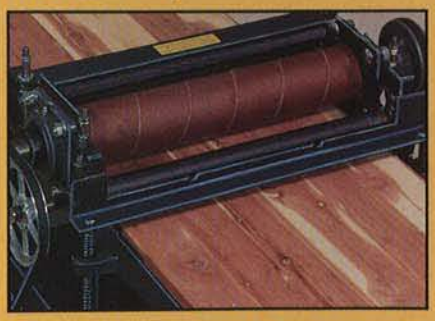

Power-fed sanding speeds production and improves the quality of your work. No more waves or cross-grain scratches. Separate sanding head installs in just minutes.

New ripsaw attachment lets you gang-rip with power feed in a fraction of the time it takes for multiple hand-fed passes on an ordinary table saw.

MAIL TODAY OR CALL
1-800-821-6651 Ext PW60

FREE FACTS

☐ **YES!** Please rush me your FREE Information Kit plus details on your 30-DAY FREE TRIAL GUARANTEE!

Woodmaster Tools, Dept. PW60, 1431 N. Topping, Kansas City, MO 64120

NAME_____

ADDRESS_____

CITY_____

STATE_____ ZIP_____

PHONE ( )_____

Here's What Woodmaster Owners Say:

Shop Test Results–"It does an excellent job of planing, on a par with more expensive machines, and even better than some commercial models."

Editor, Workbench Magazine

Best Value–"After checking them all, Woodmaster was obviously the best deal for the money. Also, I would like to acknowledge the polite and prompt service."

E. D. Holtz, North Carolina

Craftsman's New Radials Industry Leaders Any Way You Cut It.

Dave,
See my notes.
Wow! I'm impressed with the stability of the carriage assembly. Like the new wide track design and double yoke.
CRAFTSMAN
Contractor Series
10
CRAFTSMAN
Terrific! Adjustments look easy.
Great! I see you have patent pending on new internal booted motor switch.
New guard is great. Obviously best in the industry.
Great job!
Roger

Simple and accurate alignment. Fast, visible adjustments. Unparalleled safety. Craftsman's new radial arm saws offer you breakthrough technology and old-fashioned quality.

Just how good are these new radials? Well, we've released our revolutionary new blade guard design to competing manufacturers because a design this good should be shared. And that's just one of the many impressive features we designed into our new saws.

So visit your local Sears store and check out our new radial arm saws. Or, order direct from Sears catalog. There's a saw just right for you.

CRAFTSMAN®

Only at Sears

Horsepower shown on tools is maximum developed.